1

Page

Features & Benefits 1.2

General, Standard Specifications 1.2

Construction Details 1.3, 1.4
How a ***Pancake***® is built

Action Information 1.5, 1.6
How a ***Pancake***® Functions

Option Information ..... 1.7 - 1.14, 1.65, 1.66
Description of Options

Custom Options and Specials 1.15

Air Spring 1.15

Accessories
Flow Controls, Port Mounted and Others 1.16
Position Sensors 1.14, 1.16
Mounting Bolts 1.16
Wrench Flat Wrench 1.16

Detailed Specification
Model Number Codes
How to Order
Standard Dimensions
Seal Kit Part Numbers
Magnetic Piston Position Sensing
Option Dimensions

1/2"	(5)	Bore	1.17 - 1.22
3/4"	(7)	Bore	1.23 - 1.28
1-1/8"	(121)	Bore	1.29 - 1.34
1-5/8"	(221)	Bore	1.35 - 1.40
2"	(321)	Bore	1.41 - 1.46
2-1/2"	(521)	Bore	1.47 - 1.52
3"	(721)	Bore	1.53 - 1.58
4"	(1221)	Bore	1.59 - 1.64

Flow Controls
Port Mounted and Others ..... Section 12

Specials ..... ii, iii

2 Year Warranty ..... Inside back cover

Original Series

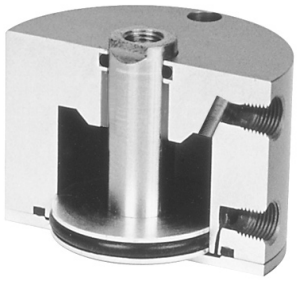
Original Series

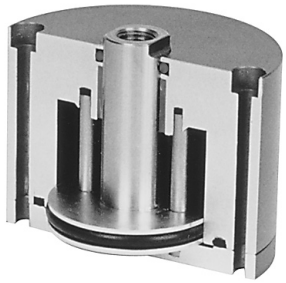
Original Series, Nonrotating

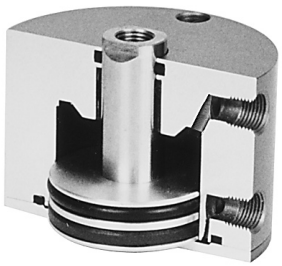
"T" Series

Laboratory tests confirm that internally lubricated Buna-N O-ring seals have extended Pancake® cylinder life 2 to 3 times beyond that of cylinders using standard Buna-N seals.

This, the original ***Pancake® Cylinder***, was designed in 1958 to satisfy the need for short stroke cylinders that would fit in very tight spaces. Today, with almost four decades of experience in thousands of cylinder applications around the world, ***The Pancake® Line*** offers you far more than any of its imitators – more features and options – better quality, strength and appearance – and far longer product life!

We are so confident in our design and manufacturing skills that ***we back every Pancake® Cylinder with our 2-year Warranty!***

Features	Benefits
• Machined from aluminum bar-stock	• Strength, precision & clean lines
• Heavy wall construction	• Bore protection
• Internally lubricated O-rings	• Smooth operation & long life
• Duralon® nonmetallic rod bushing	• Superior bushing & rod life
• Hard chrome plated stainless steel piston rod	• Long life, corrosion resistance
• Crosshatch polished bore	• Lubrication retention for seal life
• More bores, strokes, options	• Fit your application
• Clear anodized	• Appearance & corrosion resistance
• Internal guide pins in non-rotating	• Protected from environment
• Prelubed with Magnalube®-G Grease	• Long life, smooth operation
• "T" Series	• Includes PTFE piston bearing
• 2 Year warranty	• Extended buyer protection

General, Standard Specifications

Media	Air	Optional - Hydraulic
Maximum operating pressure	250 psi	Optional - 500 psi
Minimum operating pressure	See page 1.4, Item 4	
Ambient & media temperature	–25° to + 250°F	
Prelubrication	Magnalube®-G Grease	
Air line lubrication	Recommended	
Stroke tolerance	± 1/64"	

1

Original Series

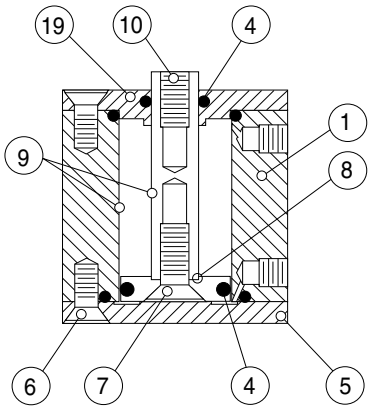

Single Rod – Double Acting
Action - X
1/2" & 3/4" Bores

Single Rod - Double Acting
Action -X shown

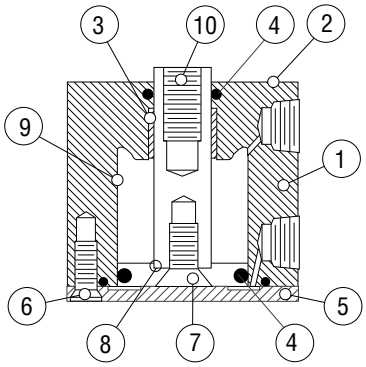

Single Rod – Double Acting
Action - X

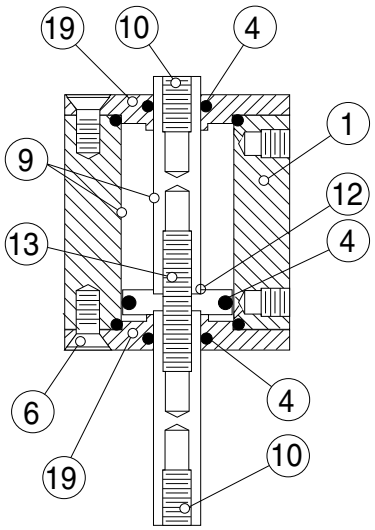

Double Rod – Double Acting
Action - XDR
1/2" & 3/4" Bores

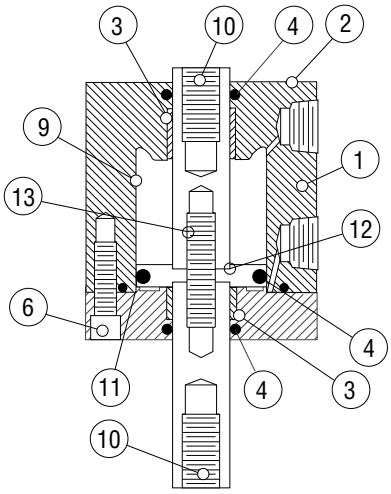

Double Rod – Double Acting
Action - XDR

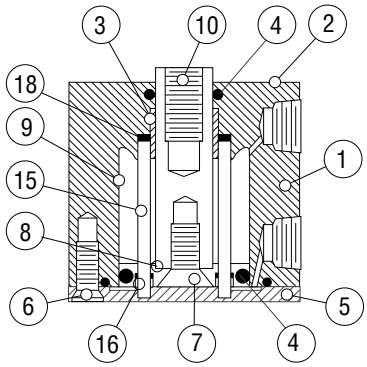

Single Rod – Double Acting –
Nonrotating
Action - XK

"T" Series (PTFE Piston Bearing)

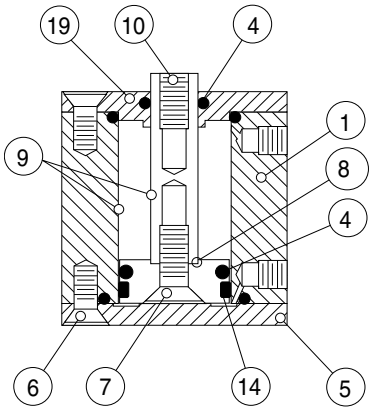

Single Rod – Double Acting
Action - X
1/2" & 3/4" Bores

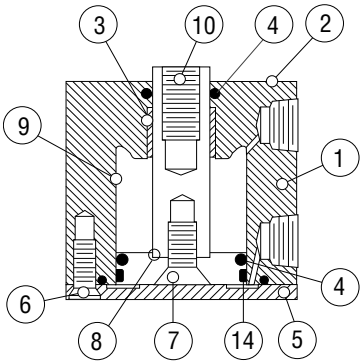

Single Rod – Double Acting
Action - X

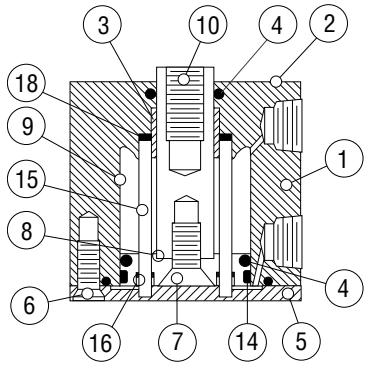

Single Rod – Double Acting –
Nonrotating
Action - XK

Nearly 4 decades of experience paying close attention to design detail, production and assembly techniques have resulted in the ultimate Fabco-Air Pancake®, short stroke cylinders. Pancakes® fit into very tight spaces and virtually ANY short stroke cylinder application. Think how well they will fit with your application!

1. The heavy wall prohibits any damage to the bore from external forces.

2. The one piece cylinder body and bushing support end is machined from solid aluminum bar-stock. This provides unequalled strength, rigidity, and piston rod support. Machining all surfaces provides perpendicularity and concentricity for locating, mounting, and making attachments to the rod. It also presents a clean, smooth, "no-dirt-catching" appearance on your machine.

3. Unique construction provides unequalled piston rod support and prohibits "Blowout"! The one piece Duralon® rod bushing is inserted from the inside and then staked in place. Duralon® is a Teflon® lined fiberglass structure with a load carrying capacity of 60,000 psi. Compare capacity with Nylon® at 1,000 psi, porous bronze at 4,500 psi, and porous iron at 8,000 psi. Duralon also provides: CONSISTENCY, reliable and predictable performance from bushing to bushing; CORROSION RESISTANCE, nonmetallic materials resist galvanic, chemical and fretting corrosion; SELF LUBRICATION, Teflon® lining provides low friction and minimizes stickslip, even under no-lube conditions; SEIZURE RESISTANCE, fiberglass backing material will not seize or gall on shaft under extreme wear. Generally the bearing length is increased as the stroke increases, providing even more piston rod support.

4. Internally lubricated Buna-N O'Rings (-25° to + 250°F) provide low profile, low friction, and long life sealing of piston and rod. All static seals are Buna-N.

These dynamic O'Rings are compounded to provide extra long wear and lower breakaway (starting) and running friction and smoother operation. In tests, cylinders with internally lubricated O'Rings have extended cycle life two to three times beyond cylinders with standard Buna-N seals. The chart below shows maximum breakaway or starting pressure to extend the rod of single rod, double acting (Action -X) cylinders with internally lubricated O'Rings under no-load conditions after 3 days delay at zero pressure. With other actions and/or combinations of options, breakaway pressures may vary.

Bore Number	5	7	121	221	321	521	721	1221
Bore, Inches	1/2	3/4	1-1/8	1-5/8	2	2-1/2	3	4
Breakaway psi	12.0	6.5	4.5	4.5	4.0	3.0	3.0	2.5

These low operating pressures allow for the use of vacuum as an Operating Media in many applications. 1.0 psi is the equivalent of 2.04" Hg of vacuum. To determine the force output of a cylinder with vacuum, multiply: Force Area of cylinder x inch Hg vacuum x 0.49 = Force, lb.

5. The thinnest possible piston and rear cover design keeps the overall height as short as possible. Please note that any cylinder offering less height than that of a Pancake® with the same stroke, sacrifices rod bushing length and/or overall strength.

6. The aluminum cover is held in place with multiple plated screws for strength, rigidity, ease of modification for specific application requirements, and ease of access for maintenance should it be required.

7. The aluminum piston is attached to the piston rod with a socket flat head cap screw which is torqued for proper preload on the screw and clamping of the piston. Loctite® on the threads and faces assures sealing and locks the assembly against pounding and vibration.

8. The piston in all bores has a counterbore for piston rod location and control of concentricity between piston rod and piston O.D.

9. Polishing the cylinder bore and piston rod produces a fine crosshatched finish. This crosshatching provides minute oil ring type grooves for retaining lubrication. This finish, unlike an ultra smooth finish, provides a place for lubrication to lie and support the seal as it moves along the surface. The surface finish and lubrication provide lower friction and longer seal life.

10. The piston rod is centerless ground, polished, and hard chrome plated (68-72 Rc) stainless steel. Surface finish is 12 RMS or better and carries lubrication like our cylinder bore (see 9). These features combined with the low friction and high load capacity of the Duralon® bushing provide exceptional cylinder life. Female, fine pitch rod thread and wrench flats are standard.

11. A pilot diameter on the cover is concentric with the rod bushing and locates in the cylinder bore to maintain the concentricity, precision, and rigidity of the ***Pancake®*** design.

12. Counterbores on both sides of the piston maintain concentricity of piston rods to each other as well as to the piston O'Ring. This also provides complete axial and radial rigidity of the piston so that it cannot float or be pounded loose.

13. The piston rods are connected by a high strength stud, sandwiching the piston between the rod end faces. The assembly is torqued for proper preload of the stud and clamping of the piston head. Loctite® on the threads and faces assures sealing and locks the assembly against pounding and vibration. This procedure provides a positive and rigid assembly that will not allow the piston to float or be pounded loose.

14. The "T" Series has a thicker piston which incorporates a bearing strip in addition to the O-ring seal. This bearing strip is a close tolerance, rectangular cross section strip of a tough, stable, wear resistant PTFE compound. If the piston rod assembly is forced off center by misalignment or other forces, this bearing, along with the long and rigid Duralon® rod bushing, supports the load and helps to maintain the long life of the cylinder bore and O-ring seal. Note: the bearing is not included, or required in double rod models because the long rod bushings at each end of the cylinder provide superb support.

15. Two guide pins of precision ground tool steel pass through the piston head. These guide pins prevent rotation of the rod with a tolerance of ±1°. Note that the guide pins are located internally. This provides protection from the environment and from physical damage. Lubrication is provided with other internal parts. NO additional space is required and the rod end is left free for attachments and tooling as required by the application. An information label, similar to this one, is applied to each cylinder to warn against damage.

WARNING
THIS CYLINDER HAS A NONROTATING ROD.
TO PREVENT INTERNAL DAMAGE HOLD ROD BY WRENCH FLATS WHEN INSTALLING OR REMOVING ATTACHMENTS

16. The guide pins pass through Polyurethane O'Ring seals and SAE660 bearing bronze bushings incorporated in the piston head. This combination provides no leak, precision guiding and long life.

18. A disk of rubber is included at the end of the guide pins to take up play and firmly seat the pins in the precision machined guide pin holes.

19. Integral rod bearing and endcap is hard anodized aluminum. The piston rod seal O-ring is located as close to the outer end as feasible so that as much of the bearing as possible gets system lubrication as well as protecting most of the bearing length from the environment. A precision machined pilot diameter locates the cylinder bore to assure concentricity and proper rod alignment.

1

Original Series	"T" Series PTFE Piston Bearing	NFPA Symbol	Action Letter Action Description
C-221-**X** 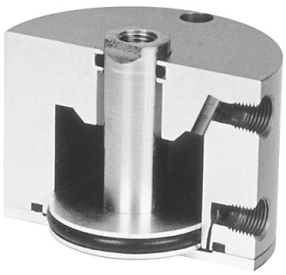	TC-221-**X** 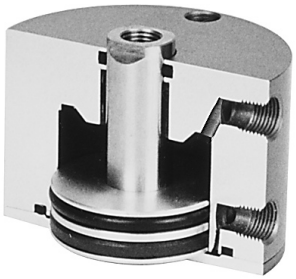	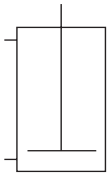	Action -**X** Single Rod Double Acting One Piston Rod Power Extend - Power Retract
C-221-**XK** 	TC-221-**XK** 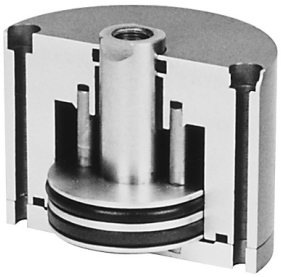	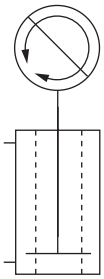	Action -**XK** 150 psi maximum Single Rod Double Acting Nonrotating One Piston Rod Power Extend - Power Retract Piston guide pins for nonrotating
C-221-**O** 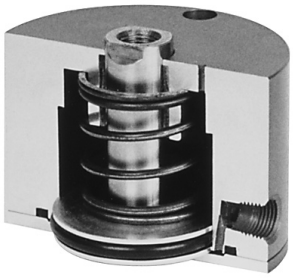	TC-221-**O** 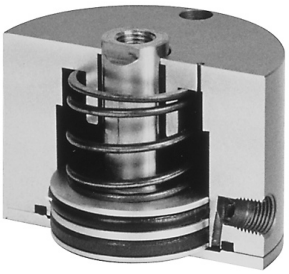	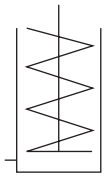	Action -**O** Single Rod Single Acting - Spring Retracted One Piston Rod Power Extend - Spring Retract
C-221-**OP** 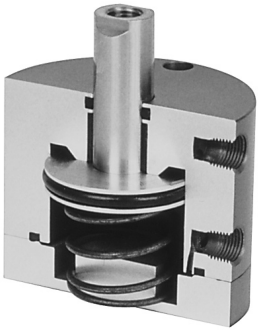	TC-221-**OP** 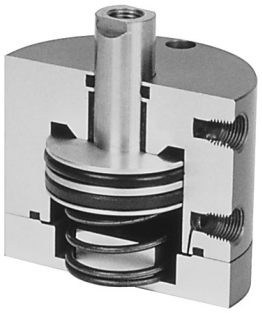	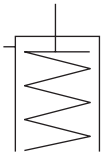	Action -**OP** Single Rod Single Acting - Spring Extended One Piston Rod Spring Extend - Power Retract

The "Action Letter" portion of the Pancake® Model Number specifies how many piston rods the cylinder has (Single Rod or Double Rod), how the piston rod is extended and retracted (Double Acting or Single Acting), and if the piston rod is restricted from rotating by internal guide pins (Nonrotating).

Original Series	"T" Series PTFE Piston Bearing	NFPA Symbol	Action Letter Action Description
C-221-**XDR** 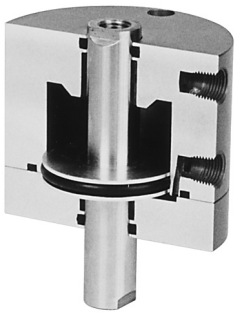	The "T" Series is not required in the double rod version. Two rod bushings provide superb rod support	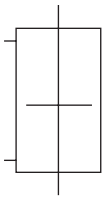	Action -**XDR** Double Rod Double Acting Two Piston Rods - One each end Power Extend - Power Retract
C-221-**XDRK** 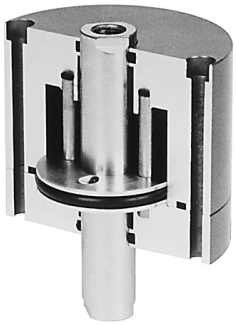	The "T" Series is not required in the double rod version. Two rod bushings provide superb rod support	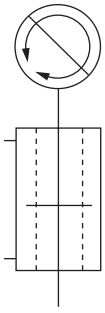	Action -**XDRK** 150 psi maximum Double Rod Double Acting Nonrotating Two Piston Rods - One each end Power Extend - Power Retract Piston guide pins for nonrotating
C-221-**ODR** 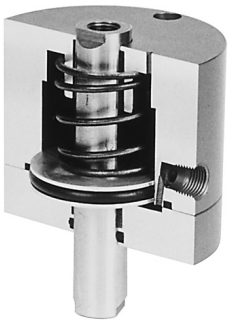	The "T" Series is not required in the double rod version. Two rod bushings provide superb rod support	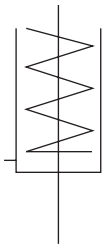	Action -**ODR** Double Rod Single Acting - Spring Retracted Two Piston Rods - One each end Power Extend - Spring Retract

PREFIX OPTIONS

MODEL NUMBER	PREFIX
METRIC Cylinder and Rod Thread. Female Rod Thread is standard.	**M**
Optional Male Rod Thread add suffix **-MR**	

PREFIX OPTIONS

Mounting holes and rod thread are configured to common METRIC sizes. Ports in 1/2" (5) and 3/4" (7) bores are M5. Ports in 1-1/8" (121) bore and larger are G1/8 with 14mm spotface for 1/8 BSP-Parallel fittings and gaskets.

Available on all series, bore, stroke and action combinations.

See *Option Specifications* pages of desired bore and action for complete dimensional details.

SUFFIX OPTIONS

MODEL NUMBER	SUFFIX
MALE ROD THREAD	
Single Rod	**-MR**
Double Rod, Rod End Only	**-MR**
Double Rod, Cap End Only	**-MR1**
Double Rod, Both Ends	**-MR2**

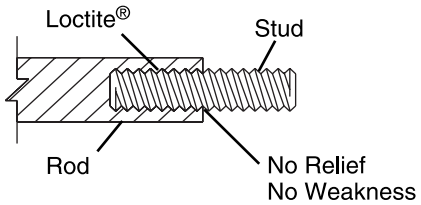

SUFFIX OPTIONS

A high strength stud is threaded into the standard female rod end and retained with Loctite®. This method eliminates the small diameter thread relief area normally required when machining male threads. This provides a much stronger rod end which can be repaired, rather than replacing the complete rod, should the thread be damaged.

Available on all series, bore, stroke and action combinations.

See *Option Specifications* pages of desired bore and action for complete dimensional details.

TEFLON® O'RING SEALS (+400° to +500° F) **-T**

For elevated temperatures (+400° to +500° F) or compatibility with exotic medias. Consult engineering for compatibility information.

NOTE: Teflon seals are **NOT** for low friction. This seal material assumes the shape of the rectangular groove, exhibits no "memory"and will not return to round O'Ring cross section. Therefore the piston and rod seals may exhibit some leakage. This is even more pronounced in applications that require thermal cycling over wide temperature ranges. They are not, therefore, recommended for such applications.

Available on all series, bores 1-1/8" (121) and larger, all strokes and actions -X, -XDR.

See *Standard Specifications* pages of desired bore and action for complete dimensional details. There are no dimensional changes from standard.

VITON® O'RING SEALS (-15° to +400° F) **-V**

For elevated temperatures (–15° to + 400°F) or compatibility with exotic medias. Consult engineering for compatibility information.

Available on all series, bore, stroke and action combinations.

See *Standard Specifications* pages of desired bore and action for complete dimensional details. There are no dimensional changes from standard.

QUAD SEALS (-30° to +250° F) **-Q**

A **QUAD** seal replaces the standard O'Ring on the piston only. Standard seal material is Buna-N (-30° to +250°F). For other materials consult engineering.

Available on all series, bore, stroke and action combinations.

See *Standard Specifications* pages of desired bore and action for complete dimensional details. There are no dimensional changes from standard.

NONROTATING Single Acting **-NR**

For Double Acting, Nonrotating
SEE Action -XK, -XDRK
on pages 1.5 and 1.6

A Hex Rod of stainless steel in a broached, hard anodized aluminum endcap replaces the round rod in Single Acting, Spring Retracted (Actions -O, -ODR) cylinders.

Available in all series, bores 1/2" (5), 3/4" (7), all strokes, actions -O, -ODR.

See *Option Specifications* pages of desired bore and action for complete dimensional details.

SUFFIX OPTIONS

MODEL NUMBER **SUFFIX**

HYDRAULIC, Low Pressure Service to 500 psi NONSHOCK. Temperature to +300° F max.

Consult factory for media compatability and operating temperatures over 300°F.

With Standard Thickness Cover **-H**

With Thick Cover **-HHC**

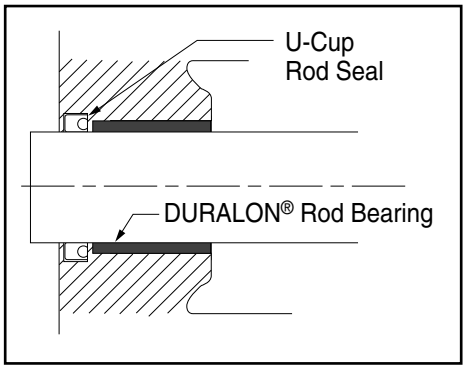

SUFFIX OPTIONS

For Air-Oil or Hydraulic systems to 500 psi NONSHOCK.

1. A specially formulated U-Cup seal replaces the O-ring piston rod seal. This eliminates leakage past the rod seal and around the bushing.

2. Option **-HHC**, on single rod bores 1-5/8" (221) & larger, includes a thicker rear cover to assure that there is no warpage or failure when the mounting surface is the Rod End Face. See chart below.

3. **1/4 NPT Ports** are available on bores 1-5/8" (221) & larger. See Option **-P14** below.

4. Single Acting (Spring Return) Cylinders are designed for the spring to return the piston & rod assembly. Because of the low return forces available & the somewhat restricted flow, the piston returns slowly when used with oil at any pressure. Double Acting Cylinders are therefore recommended for Hydraulic service.

–H is available on all series, bores 1-1/8" (121) and larger, actions -X & -O, -OP, -XDR & -ODR, all strokes. Available also for Actions -XK & -XDRK on bores 2-1/2" (521) and larger. Consult factory for available strokes on bores 1-1/8 (121) to 2" (321) and actions -XK & -XDRK.

-HHC is available on all series. Bores 1-5/8" (221) and larger, all strokes, Actions -X & -O.

SEE *Option Specifications* pages of desired Bore & Action for complete dimensional details.

Pressure Ratings (psi) for Various Mountings						
OPTION	–H	–H	–H	–H	–H	–HHC
ACTION	–X, –O	–OP	–XDR, –ODR	–XK	–XDRK	–X, –O
Mounting surface is at rod end	250	500	500	150	150	500
Mounting surface is at cap end	500	500	500	150	150	500
Other Options in Combination with –H or –HHC						
–F	250	500	500	150	150	500
–PM	500	500	NA	150	NA	NA
–SM	500	500	NA	150	NA	NA
–EPM	500	500	NA	150	NA	NA
–ESM	500	500	NA	150	NA	NA
–AS	500	NA	NA	150	NA	NA
–RS	500	500	NA	150	NA	NA

AIR SERVICE
With Thick Cover **-HC**

-HC includes the thick rear cover. It is for AIR service, to 250 psi, when the thick rear cover is desired.

Available on all series, Bores 1 5/8" (221) and larger, all strokes, Actions; -X, -O.

See *Option Specifications* pages of desired Bore and Action for complete dimensional details.

1/4 NPT PORTS **-P14**

Port size 1/4 NPT. On bores 1-5/8" (221) and 2" (321) the orifice between the port and the bore is also increased. All ports are in the standard locations.

Use when reduced pressure drop or higher cycle speeds are desired. They are particularly advantageous in Air-Oil Hydraulic applications.

Available on all series, bores 1-5/8" (221) & larger, all strokes, all actions.

See *Standard Specifications* pages of desired bore & action for complete dimensional details. There are no dimensional changes from standard other than port size.

SUFFIX OPTIONS

HOLE THRU Double Rod Shaft

Bore	Standard		Standard Plus	
	Hole Size thru stud	Model No. Suffix (Std)	Hole Size thru stud	Model No. Suffix (Std Plus)
1/2", 3/4"	1/16	-06	–	–
1-1/8"	1/8	-13	5/32	-16
1-5/8"	1/8	-13	1/4	-25
2"	5/32	-16	5/16	-31
2-1/2"	5/32	-16	1/4	-25
3"	5/32	-16	1/4	-25
4"	1/4	-25	–	–

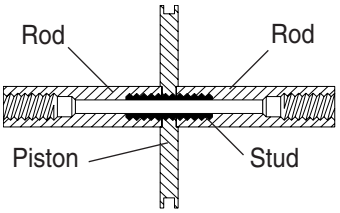

SUFFIX OPTIONS
150 psi maximum operating pressure

A hole is drilled through the piston rods & the double rod stud (see construction details on page 1.3). This hole is used for the passage of Vacuum, Air, Gas, Oil, Liquid or any media that is compatible with the stainless steel piston rod and the steel stud. Maximum pressure, 150 psi. Hole sizes available for each bore size are shown in the chart to the left. If a larger hole is needed (for higher flows or mechanical members) or all stainless steel construction is needed (for compatibility or higher pressure) see "One Piece Piston & Rod Construction" under *Custom Options* on page 1.15.

Insert the SUFFIX Number into the Model Number immediately after the desired Action. For example: -XDR13

Available on Original Series, all Bores, all Strokes, Action; -XDR, -XDRK, -ODR.

See *Standard Specifications* pages of desired Bore & Action for complete dimensional details. There are no dimensional changes from standard.

FINISH: Clear anodize is standard.

Plating: ***Pro-Coat™***
Electroless Nickel **-N**

Pro-Coat™, Electroless Nickel Plating, is a hard, smooth, corrosion and wear resistant coating. It will often suffice for applications where stainless steel is specified. Its lasting luster provides high visual appeal.

The coating is a high nickel, low phosphorous alloy deposited by chemical reduction without electric current that is “mil-for-mil” more corrosion resistant than electroplated nickel. The surface is virtually pore free. The thickness of the nickel deposit is consistent over the entire surface. Blind holes, threads, small diameter holes and internal surfaces all receive the same amount of plating. It has natural lubricity and a high resistance to abrasion. As shipped hardness of the coating is approximately 49 Rockwell C. Heat treating can increase hardness to approximately 60 Rockwell C. For specific applications, consult engineering.

Besides cylinder parts, ***Pro-Coat™*** may be applied to valve bodies, solenoid housings, fittings and most any item that appears in this catalog.

Pro-Coat™ is available on all series, bore, stroke and action combinations.

See *Standard Specifications* pages of desired bore and action for complete dimensional details. There are no dimensional changes from standard.

STROKE COLLAR

on Piston Rod in 1/8" increments.

1) Start with the next longest stroke.
2) Select the amount the stroke is to be shortened.
3) Specify the corresponding SUFFIX designation.

1/8"	**-C1**
1/4"	**-C2**
3/8"	**-C3**
1/2"	**-C4**
5/8"	**-C5**
3/4"	**-C6**
7/8"	**-C7**

For those "in-between" strokes, a STROKE COLLAR is incorporated on the piston rod. The collar fits tightly on the piston rod so that it cannot float as the piston is stroked. Tolerance on the stroke is ± 1/64". For tighter tolerances on the stroke or final rod position, consult Engineering.

Available on all Series, all Bores, all Strokes, Actions; -X, -XDR, -OP. Also all series, Bores 3/4" (7) and larger, all Strokes, Actions; -XK, -XDRK. Also all Series, Bores 1/2" (5) & 3/4" (7), Actions; -O, -ODR.

SEE *Standard Specifications* pages of desired Bore & Action for complete dimensional details.

Cap End Rod Stick-out of Double Rod Units increases by amount stroke is shortened.

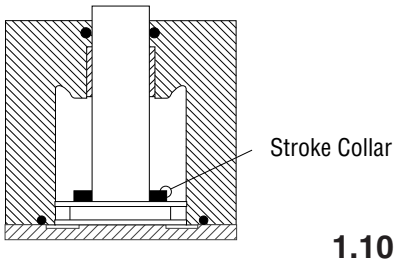

SUFFIX OPTIONS

MODEL NUMBER **SUFFIX**

1

ADJUSTABLE EXTEND STROKE

For strokes through 4". **-AS**
Full stroke adjustment is standard.

NOTE! Use caution when mounting to avoid creating pinch poiunts.

C-221-X-AS

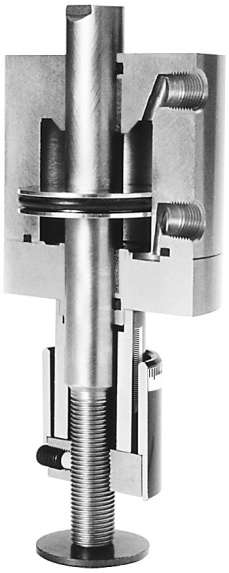

Adjustment settings are simplified by convenient scale markings applied to nut skirt and stop tube.

SUFFIX OPTIONS

Dial-A-Stroke® provides a rugged and precision adjustment of the extend stroke of the cylinder. The stop tube, adjustment nut with skirt & minimum clearances combine to eliminate pinch points, thus providing operator safety. **Note!** Use caution when mounting to avoid creating pinch points with other parts of your machine design.

The stop tube is blue anodized aluminum, the adjustment nut is blackened steel with a black anodized aluminum skirt, and the stop flange is red anodized aluminum; all for corrosion resistance and appearance. The adjustment nut, steel for long life, includes a lock screw with a plastic plug so that the adjustment nut can be locked in place without damaging the threads. The stop flange is mounted on the end of the adjustment rod so that the nut cannot come off. The fine pitch threads on the adjustment rod and nut provide precision adjustment. Bores 1-1/8" (121) and 1-5/8" (221) have a 1/2-20 thread giving .050" adjustment per revolution & Bores 2" (321) & larger have a 3/4-16 thread giving .063" adjustment per revolution.

The -AS designation provides full stroke adjustment.

Available on Original Series, Bores 1 1/8" (121) & larger, all Strokes, Actions; -X, -XK, -O.

SEE *Option Specifications* pages of desired Bore and Action for complete dimensional details.

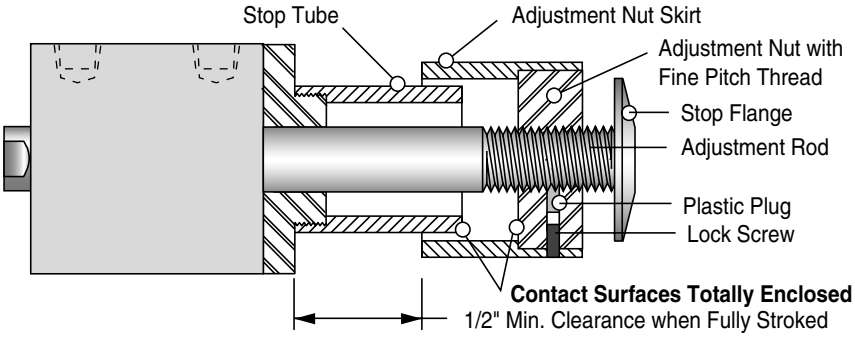

ADJUSTABLE RETRACT STROKE

Any stroke with up to and including 1" adjustment.. . . . . **-RS**
Any stroke with over 1" adjustment, specify adjustment length after the -RS
Example: 2" adjustment. . . . . **-RS2**

D-221-X-RS

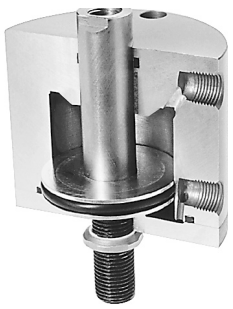

An adjusting screw with a thread sealing locknut mounted in a thick rear cover provides a simple yet rugged and precision adjustment of the cylinder stroke in the retract direction. The fine thread of the adjusting screw provides precision adjustment. Bores 1/2" (5), 3/4" (7), have a 5/16-24 thread giving .042" adjustment per revolution. Bore 1-1/8" (121) has a 3/8-24 thread giving .042" adjustment per revolution. Bores 1-5/8" (221) and larger have a 1/2-20 thread giving .050" adjustment per revolution.

The –RS designation provides full stroke adjustment of any cylinder with 1" stroke or less, and 1" of stroke adjustment on all longer strokes. When longer adjustments are required, on longer cylinders, add the desired adjustment to the -RS designation (1/2" increments please). Example:-RS2 will provide 2" of adjustment on any cylinder with 2" or more of stroke.

Available on all series, all bores, all strokes, actions -X, -XK, -O, -OP.

See *Option Specifications* pages of desired bore and action for complete dimensional details.

SUFFIX OPTIONS

MODEL NUMBER **SUFFIX**

SOUND LIMITERS

Rod End Only	**-LF**
Cap End Only	**-LR**
Both Rod and Cap Ends	**-LFR**

Temperature Range: –25° to +220° F

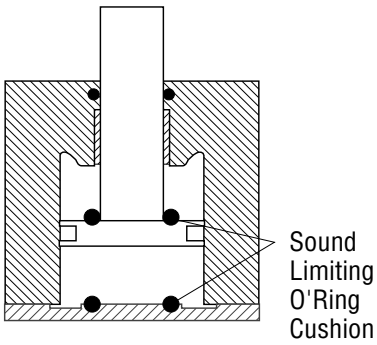

SUFFIX OPTIONS

For applications where you need a small amount of cushion at the end of the cylinder stroke to take out the metallic “slap” of piston head on piston stop. This is accomplished by placing an O'Ring on the piston, and/or in the rear cover so that initial contact is with the elastomer and not metal-to-metal.

The Fabco-Air design assures sufficient compression of the seals to allow full stroke.

Because of the temperature limitations of the adhesives involved, sound limiters are available in cylinders with internally lubricated Buna-N O'Rings only.

Available on all series, all bores, all strokes, actions -X, -O (Cap end only, -LR), -OP, -XDR, XDRK, -ODR (Cap end only -LR).

See *Standard Specifications* pages of desired bore and action for complete dimensional details. There are no dimensional changes from standard.

RUBBER BUMPERS

Rod End Only	**-BF**
Cap End Only	**-BR**
Both Rod and Cap Ends	**-BFR**

Temperature Range: –25° to +220° F

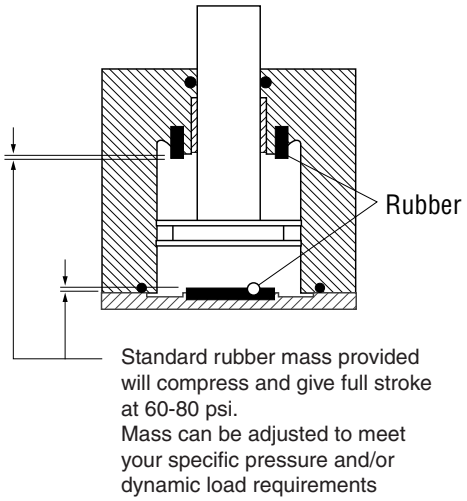

A rubber doughnut is bonded to the cylinder head to act as the piston stop and absorb the impact of the piston. This reduces noise and absorbs energy, thus reducing destruction of the cylinder and tooling due to pounding. The amount of rubber that extends beyond the normal piston stop is designed to compress and allow full stroke of the cylinder at 60 to 80 psi. If your application uses lower pressure or has high energy, consult engineering with application details so that rubber mass can be adjusted to meet your specific requirements.

On applications such as punching, shearing, etc., where high forces are built up and then very quickly released, the proper method of “CATCHING” this load is to adjust the position of the cylinder and tooling so at the point of breakthrough the piston is very close to or touching the bumper. This reduces the dynamic load that the piston and bumper are required to absorb. It is highly recommended that shock absorbers be considered and built into the tooling to assist in absorbing the force and dynamic loads generated in such applications.

Because of the temperature limitations of the adhesives involved (-25° to + 220°F) Rubber Bumpers are available in cylinders with standard internally lubricated Buna-N seals only.

Use to reduce noise and absorb impact.

Note! The springs in single acting models are designed to return only the piston and rod assembly and will not significantly compress the rubber bumpers.

Available on all series, all bores, all strokes, actions -X, -XK, -O (Cap end only, -BR), -OP (Rod end only, -BF), -XDR, XDRK, -ODR (Cap end only -BR).

See *Standard Specifications* pages of desired bore and action for complete dimensional details. There are no dimensional changes from standard.

1

SUFFIX OPTIONS

MODEL NUMBER **SUFFIX**

CLEVIS (Pivot) **MOUNT**

Ports in Line with Slot	**-PM**
Ports 90° to Slot	**-SM**

C-221-X-PM with RC-38

SUFFIX OPTIONS

CLEVIS MOUNT provides a pivot point attachment to allow pivotal motion of the cylinder as the piston rod extends or retracts. The pivot is bushed with an oil filled powdered metal bushing. The pivot pin (416 stainless steel) and clips are included as standard. On bores 1-5/8" (221), 2-1/2" (521), 3" (721) and 4" (1221), the Clevis Mount can be rotated 90° to provide either -PM or -SM option. To further assist in the mounting, rod clevises and eye brackets are available accessories.

In many applications requiring pivotal mounting, the cylinder is mounted with its centerline horizontal. Due to the weight of the cylinder and its attachments, this can result in some off center loading, and possibly binding of the piston and rod, causing accelerated wear. For such applications the "T" Series cylinders are recommended.

Available on all series, all bores, all strokes, actions: -X, -XK, -O, -OP.

See *Options Specifications* pages of desired bore and action for complete dimensional details of cylinders, rod clevises and eye brackets.

EYE (Pivot) **MOUNT**

Ports in Line with Tang	**-EPM**
Ports 90° to Tang	**-ESM**

C-221-X-EPM

EYE MOUNT provides a pivot point attachment to allow pivotal motion of the cylinder as the piston rod extends or retracts. The pivot is bushed with an oil filled powdered metal bushing. On bore 1-5/8" (221) the Eye Mount can be rotated 90° to provide either -EPM or -ESM option. To further assist in the mounting, rod clevises and clevis brackets are available.

In many applications requiring pivotal mounting, the cylinder is mounted with its centerline horizontal. Due to the weight of the cylinder and its attachments, this can result in some off center loading, and possibly binding of the piston and rod, causing accelerated wear. For such applications the "T" Series cylinders are recommended.

Available on all series, bores:1/2" (5), 3/4" (7), 1-1/8" (121), 1-5/8" (221) and 2" (321), all strokes, actions: -X, -XK, -O, -OP.

See *Option Specifications* pages of desired bore and action for complete dimensional details of cylinders, rod clevises and eye brackets.

THREADED NOSE MOUNT **-F**

C-221-X-F

THREADED NOSE with pilot diameter provides convenient, rigid and precision mounting. A hex mounting nut is included as standard and is also available separately. On bores 1-1/8" (121) and 1-5/8 (221) a urethane rod wiper is included, as standard, to exclude dirt from the rod bushing and seal.

Available on all series, bores:1/2" (5), 3/4" (7), 1-1/8" (121), 1-5/8" (221), all strokes, all actions.

See *Option Specifications* pages of desired bore and action for complete dimensional details of cylinder and mounting nuts.

Suffix Option -E

Specifies Magnetic Piston and Dovetail Mounting Slot(s)
Order Sensors Separately

A single slot on longer stroke models has room to accommodate multiple sensors.

Shorter stroke Pancake® Cylinders are furnished with two dovetail mounting slots when Suffix Option "E" is specified.

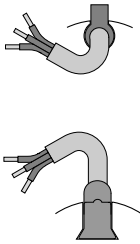

Keyway slot for 1/2" bore Pancakes. Wire is in-line with slot.

1/4" 60° Dovetail for 3/4" bore Pancake®s & up.

1/2" (5) Bore

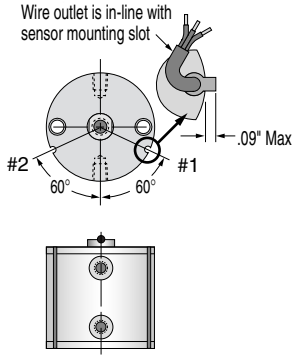

Sensors available for "D" & "TD" strokes and longer. Strokes DJ & TD – TJ have 2 mounting slots; others have 1. Strokes D & TD are ported on opposite sides.

3/4" (7) Bore

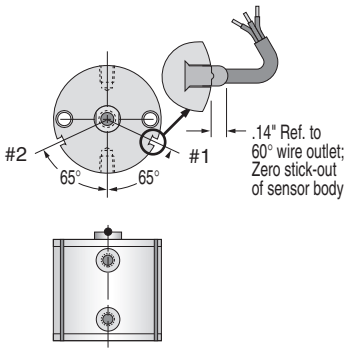

Sensors available for "D" & "TD" strokes and longer. D – J & TD – TJ have 2 mounting slots; others have 1. Strokes D & TD are ported on opposite sides.

1 1/8" (121) Bore

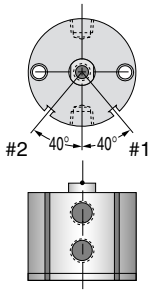

Sensors available for "D" & "TD" strokes and longer. D – F & TD – TF have 2 mounting slots; others have 1. Strokes D & TD are ported on opposite sides.

1 5/8" (221) Bore

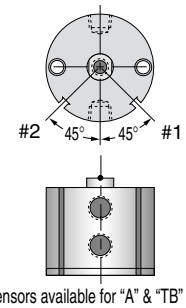

Sensors available for "A" & "TB" strokes and longer. A – D & TB – TD have 2 mounting slots; others have 1. Strokes A is ported on opposite sides.

2" (321) Bore

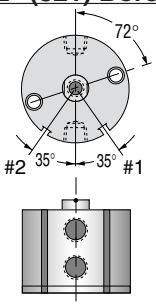

Sensors available for "AA" & "TA" strokes and longer. AA – D & TA – TD have 2 mounting slots; others have 1. Strokes AA – A & TA are ported on opposite sides.

2 1/2" (521) Bore

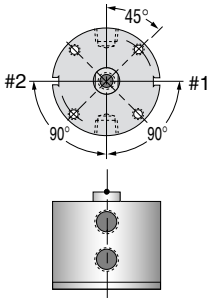

Sensors available for "AA" & "TA" strokes and longer. AA – C & TA – TC have 2 mounting slots; others have 1. Stroke AA is ported on opposite sides.

3" (721) Bore

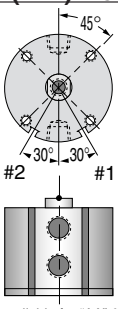

Sensors available for "AA" & "TA" strokes and longer. AA – C & TA – TC have 2 mounting slots; others have 1. Stroke AA is ported on opposite sides.

4" (1221) Bore

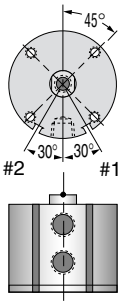

Sensors available for "AB" strokes and longer. AB – A & TAA – TA have 2 mounting slots; others have 1.

Temperature Range:
–20° to + 80°C (–4° to + 176°F)

Female Cordsets for Quick Disconnect	Length	Part No.
	1 Meter	CFC-1M
	2 Meters	CFC-2M
	5 Meters	CFC-5M

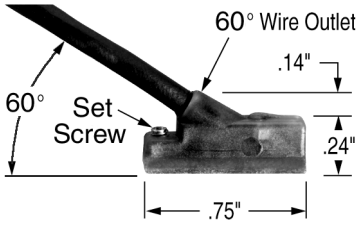

Low Profile, Solid State, Magnetic Piston Position Sensors

Encased in plastic housing, dovetail style sensors are corrosion resistant. 60° wire outlet allows close mounting. Profile shown here is typical for all but 1/2" bore Pancake®s.

Ordering Guide – Dovetail Style Magnetic Sensors for Pancake® Cylinders

Cylinder Model	Sensor Type	Prewired 9 ft. Part No.	Quick Disconnect Part No.*	LED	Electrical Characteristics
1/2" Bore Pancake	Electronic	9B49-000-031	9B49-000-331	Yes	Sourcing, PNP, 6-24 VDC, 0.20 Amp Max current, 1.0 Voltage Drop
1/2" Bore Pancake	Electronic	9B49-000-032	9B49-000-332	Yes	Sinking, NPN, 6-24 VDC, 0.20 Amp Max current, 1.0 Voltage Drop
All other Pancakes	Electronic	949-000-031	949-000-331	Yes	Sourcing , PNP, 6-24 VDC, 0.20 Amp Max current, 0.5 Voltage Drop
All other Pancakes	Electronic	949-000-032	949-000-332	Yes	Sinking, NPN, 6-24 VDC, 0.20 Amp Max current, 0.5 Voltage Drop

Note: 1/2" bore quick disconnect style supplied with 12" pigtail. All other bores supplied with 6" pigtail. Order female cordsets separately.*

Specials

1

Let us help you!

Our engineering and special products departments are willing and able to assist you with your design. FABCO-AIR will produce cylinders and valves to meet your specific application requirements. In quantities of one and up. We have been doing it for almost 40 years. Many of our specials have become custom options; many have become standard catalog options.

Custom Options are modifications that we produce on a routine basis, but they have too many combinations of features for practical listing in this catalog. Following are just a few of the more common of these custom options:

- Custom rod extensions
- Custom rod end configurations
- Pilot diameters on mounting faces
- 1 Piece double rod, piston & rod assembly with or without a hole through
- Rod wipers, urethane or metallic
- Thick covers with ports
- Covers with manifolding
- Other materials
- Other lubricants
- Strokes other than listed with special length bodies and rods
- Mounting styles & dimensions to specifications
- Back-to-Back cylinders for 3 or 4 positions
- Multiple position cylinders– Tandem type for 3 or more positions

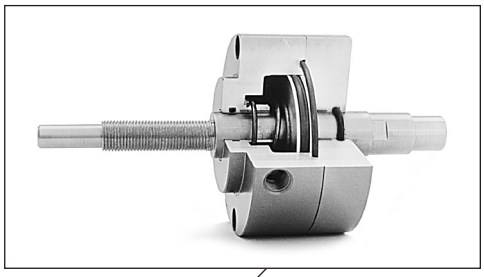

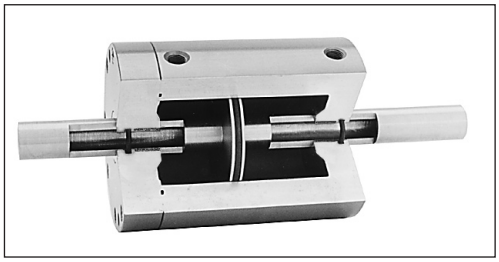

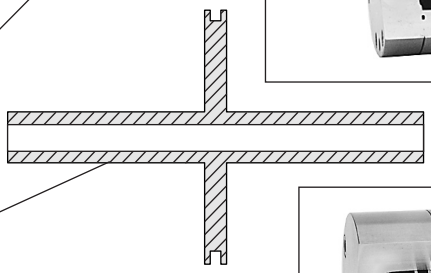

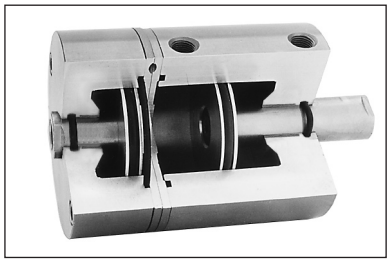

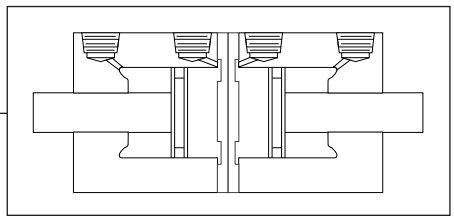

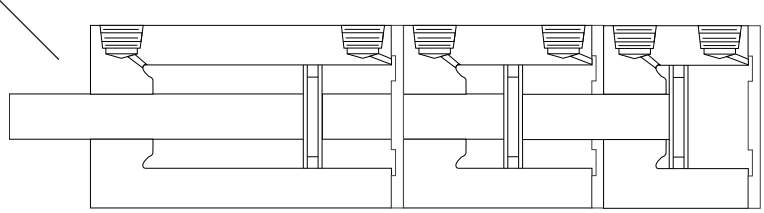

Air Springs

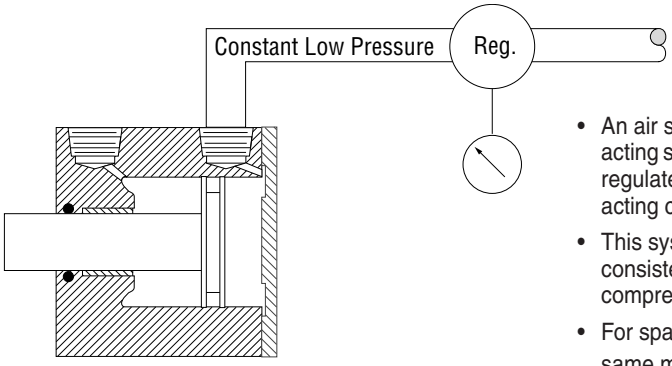

- Small regulator supplies constant pressure & controls spring force.
- Connection to Rod End Port results in a spring retracted type cylinder
- Connection to Cap End Port results in a spring extended type cylinder

- An air spring allows the use of any standard double acting cylinder as a single acting spring return (push or pull) type. To accomplish this simply connect a constant regulated pressure (must be a relieving regulator) to the proper port of the double acting cylinder.
- This system gives you a variable spring load (by adjusting the pressure) that is consistent over the full stroke and life of the cylinder and will not break as helical compression springs often do.
- For space and cost savings, one regulator can serve several cylinders on the same machine.

Flow Controls

Port Mounted, Swivel: Brass or Molded Body

Mounts directly to Cylinder,Valve or Manifold.

Brass Body Style *(above)*
Male Sizes: #10-32, 1/8 NPT, 1/4 NPT
Female NPT or Instant Tube Connections:
#10-32, 1/8 NPT, 1/4 NPT, 5/32" T, 1/4" T, 3/8" T
See page 12.3 & 12.4 for details.

Molded Body Style *(left)*
Male Sizes: #10-32, 1/8 NPT, 1/4 NPT, 3/8 NPT
Instant Tube Connections: 5/32" T, 1/4" T, 3/8" T
See page 12.3 for details.

Position Sensors

Dovetail Style, Low Profile, Solid State Electronic

Sensor dovetail slides into a mating slot on the cylinder body, is positioned as desired, and locked in place with a set screw.
See page 1.14 for Specifications

Bolts

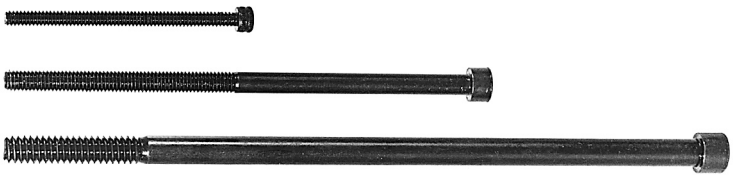

Pancake® Cylinder Mounting Bolts

Fabco-Air has in stock socket head cap screws to mount all standard ***Pancake®*** cylinders, all bores, all strokes.

Also consider for ***Square1®*** and other products.

SIZE	LENGTH (Inches)															
	1/2	3/4	1	1-1/4	1-1/2	1-3/4	2	2-1/4	2-1/2	2-3/4	3	3-1/2	4	4-1/2	5	6
#6-32		✓	✓		✓	✓	✓									
#8-32	✓	✓	✓													
#10-32		✓	✓	✓	✓	✓	✓		✓		✓	✓	✓	✓	✓	✓
1/4-20			✓	✓	✓	✓	✓	✓	✓	✓	✓	✓	✓	✓	✓	✓

Wrench Flat Wrench

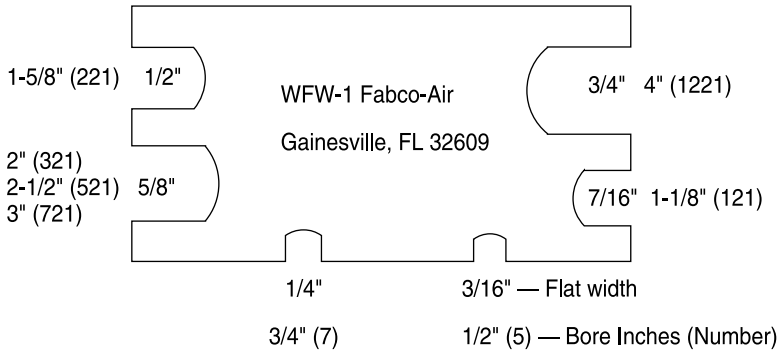

Part Number **WFW-1**

0.09" Thick, heat treated and plated steel wrench for holding the piston rod of ***Pancake®*** cylinders while tightening or loosening rod end tooling or attachments.

Also consider for ***Square1®*** and other products.

1

Model Number Code

Prefix Options	Stroke		Bore		Action		Suffix Options
Leave blank if none desired	TE	–	5	–	X	–	MR

Metric	M
See pages 1.7, 1.19 & 1.22	

Bore	Code
1/2"	5
12.7mm	5

Standard Strokes

Original Series

Action	X XDR	O ODR	OP
Stroke			
1/16	A	A	A
1/8	B	B	B
1/4	C	C	C
3/8	D	D	D
1/2	E	E	E
5/8	F	F	–
3/4	G	G	–
1	H	H	–
1 1/4	I	I	–
1 1/2	J	J	–
2	K	K	–
3	L	–	–
4	M	–	–

"T" Series Includes PTFE piston bearing

Action	X	O	OP
Stroke			
1/8	TC	TC	TC
1/4	TD	TD	TD
3/8	TE	TE	TE
1/2	TF	TF	–
5/8	TG	TG	–
1	TH	TH	–
1 1/4	TI	TI	–
1 1/2	TJ	TJ	–
2	TK	TK	–
3	TL	–	–
4	TM	–	–

Grey shading indicates sensors are not available.

Strokes are NOT affected by magnetic piston Option "E"

Action

Single rod

Double acting	**-X**
Single acting, spring retracted	**-O**
Single acting, spring extended	**-OP**

Double rod

Double acting	**-XDR**
Single acting, spring retracted	**-ODR**

See pages 1.5 & 1.6 for Action Information.
See pages 1.18 & 1.21 for Standard Specifications

HOW TO ORDER

1. Under ***Stroke*** – select letter(s) for desired Series and Stroke.
2. Under ***Bore*** – select **5** for 1/2" bore.

Seven Other Bore Sizes are Available

Bore	Bore Code	See page
3/4"	7	1.23
1 1/8"	121	1.29
1 5/8"	221	1.35
2"	321	1.41
2 1/2"	521	1.47
3"	721	1.53
4"	1221	1.59

3. Under ***Action*** – select letter(s) for desired action.
4. Under ***Prefix & Suffix Options***– select letter(s) for desired options and add to model number.

EXAMPLES

E-5-X

Original Series, 1/2" stroke - 1/2" Bore - Single Rod, Double Acting

TE-5-X-MR

"T" Series, 3/8" Stroke - 1/2" Bore - Single Rod, Double Acting - Male Rod Thread

Suffix Options

Male rod thread: Single rod		**-MR**
Double rod, rod end		**-MR**
Double rod, cap end		**-MR1**
Double rod, both ends		**-MR2**
Viton seals		**-V**
Quad seals		**-Q**
External nonrotating guide		**-K**
Hex rod nonrotating, single acting models to 2" stroke only		**-NR**
Hole thru double rod shaft : 1/16" hole 150 psi max		**-06**
Finish: **ProCoat™** (Electroless Nickel)		**-N**
Stroke collar:	1/8"	**-C1**
1/4" **-C2**	3/8"	**-C3**
1/2" **-C4**	5/8"	**-C5**
3/4" **-C6**	7/8"	**-C7**
Rubber Bumpers:	Rod end	**-BF**
	Cap end	**-BR**
	Both ends	**-BFR**
Adjustable retract stroke (Over 1" adjustment add desired length, e.g. -RS2)		**-RS**
Clevis mount:	Ports in-line with slot	**-PM**
	Ports 90° to slot	**-SM**
Eye mount:	Ports in-line with tang	**-EPM**
	Ports 90° to tang	**-ESM**
Threaded nose mount: Single rod		**-F**
Double rod, rod end		**-F**
Double rod, cap end		**-F1**
Double rod, both ends		**-F2**
Magnetic piston & sensor mounting slot(s) Order sensors separately. See page 1.14 Stroke length determines number of mounting slots. See page 1.14, 1.20, 1.21.		**-E**

See pages 1.7 – 1.15 for general option information and pages 1.19, 1.20 & 1.22 for option specifications of 1/2" bore models.

A complete library of cylinder CAD drawings is available from your local Fabco-Air Distributor or from the Fabco-Air web site – http://www.fabco-air.com

Action –X
Double Acting

Note 1:
Strokes H–M & TH–TM have two #6-32 x .44 Tapped Mounting Holes on each end.

See page 1.16 for Mounting Bolts.
Push area = .20
Pull area = .15
Seal Kits for Series:
Original = 5-SK
"T" = 5-SKG

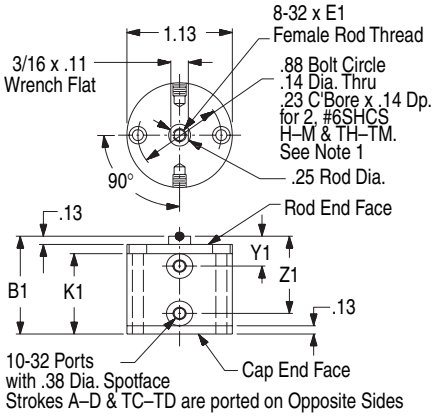

For
Single Rod, Double Acting, Nonrotating
See Option -K on page 1.20

Original Series

Stroke, Inch	1/16	1/8	1/4	3/8	1/2	5/8	3/4	1	1 1/4	1 1/2	2	3	4
Stroke, Letter	A	B	C	D	E	F	G	H	I	J	K	L	M
Action –X Double Acting													
B1	.83	.83	.96	1.08	1.21	1.36	1.49	1.83	2.08	2.33	2.96	3.96	4.96
E1	.25	.25	.25	.38	.38	.38	.38	.38	.38	.38	.38	.38	.38
K1	.56	.56	.69	.81	.94	1.09	1.22	Note 1	Note 1	Note 1	Note 1	Note 1	Note 1
Y1	.46	.46	.46	.46	.46	.46	.46	.46	.46	.46	.55	.55	.55
Z1	.52	.52	.65	.77	.89	1.05	1.18	1.52	1.77	2.02	2.65	3.65	4.65
Weight, lb.	.08	.08	.08	.09	.11	.12	.13	.16	.19	.21	.27	.36	.46
Action –O Single Acting, Spring Retracted													
B3	.83	.96	1.08	1.36	1.49	1.83	2.33	2.96	2.96	3.96	3.96	NA*	NA*
E3	.25	.25	.38	.38	.38	.38	.38	.38	.38	.38	.38	"	"
K3	.56	.69	.81	1.09	1.22	Note 1	Note 1	Note 1	Note 1	Note 1	Note 1	"	"
Y3	.46	.46	.46	.46	.46	.46	.46	.55	.55	.55	.55	"	"
Z3	.52	.65	.77	1.05	1.18	1.52	2.02	2.65	2.65	3.65	3.65	"	"
Weight,. lb.	.08	.09	.10	.12	.13	.16	.22	.28	.28	.37	.37	"	"
Preload, lb.	2.0	2.0	.9	1.2	.7	1.9	1.2	1.0	1.7	1.3	1.3	"	"
End of Stroke, lb.	3.2	3.2	3.2	3.2	3.2	3.5	3.2	3.5	5.7	5.3	6.7	"	"
Action –OP Single Acting, Spring Extended													
B4	.95	1.16	1.39	1.80	2.05	NA*	NA*	NA*	NA*	NA*	NA*	NA*	NA*
E4	.25	.25	.25	.38	.38	"	"	"	"	"	"	"	"
K4	.63	.77	.88	1.16	1.29	"	"	"	"	"	"	"	"
Y4	.52	.58	.71	.83	.96	"	"	"	"	"	"	"	"
Z4	.64	.85	1.08	1.49	1.74	"	"	"	"	"	"	"	"
Weight, lb.	.08	.09	.12	.13	.14	"	"	"	"	"	"	"	"
Preload, lb.	1.7	1.7	.7	1.2	.7	"	"	"	"	"	"	"	"
End of Stroke, lb.	3.0	3.0	3.0	3.2	3.2	"	"	"	"	"	"	"	"

"T" Series

Stroke, Inch	1/8	1/4	3/8	1/2	5/8	1	1 1/4	1 1/2	2	3	4
Stroke, Letter	TC	TD	TE	TF	TG	TH	TI	TJ	TK	TL	TM
Action –X Double Acting											
B1	.96	1.08	1.21	1.36	1.49	1.83	2.08	2.33	2.96	3.96	4.96
E1	.25	.38	.38	.38	.38	.38	.38	.38	.38	.38	.38
K1	.69	.81	.94	1.09	1.22	Note 1	Note 1	Note 1	Note 1	Note 1	Note 1
Y1	.46	.46	.46	.46	.46	.46	.46	.46	.55	.55	.55
Z1	.65	.77	.89	1.05	1.18	1.52	1.77	2.02	2.65	3.65	4.65
Weight, lb.	.08	.09	.11	.12	.13	.16	.19	.21	.27	.36	.46
Action –O Single Acting, Spring Retracted											
B3	1.08	1.36	1.49	1.83	2.33	2.96	2.96	3.96	3.96	NA*	NA*
E3	.38	.38	.38	.38	.38	.38	.38	.38	.38	"	"
K3	.81	1.09	1.22	Note 1	Note 1	Note 1	Note 1	Note 1	Note 1	"	"
Y3	.46	.46	.46	.46	.46	.55	.55	.55	.55	"	"
Z3	.77	1.05	1.18	1.52	2.02	2.65	2.65	3.65	3.65	"	"
Weight,. lb.	.08	.09	.10	.12	.13	.16	.22	.28	.28	"	"
Preload, lb.	2.8	2.0	1.2	1.9	1.9	1.0	1.7	1.3	1.3	"	"
End of Stroke, lb.	3.2	3.2	3.2	3.5	3.5	3.5	5.7	5.3	5.3	"	"
Action –OP Single Acting, Spring Extended											
B4	1.26	1.67	1.92	NA*	NA*	NA*	NA*	NA*	NA*	NA*	NA*
E4	.25	.25	.38	"	"	"	"	"	"	"	"
K4	.88	1.16	1.29	"	"	"	"	"	"	"	"
Y4	.58	.70	.83	"	"	"	"	"	"	"	"
Z4	.95	1.36	1.61	"	"	"	"	"	"	"	"
Weight, lb.	.08	.09	.12	"	"	"	"	"	"	"	"
Preload, lb.	1.7	1.7	.7	"	"	"	"	"	"	"	"
End of Stroke, lb.	3.0	3.0	3.0	"	"	"	"	"	"	"	"

Action –O
Single Acting
Spring Retracted

Note 1:
Strokes F–K & TF–TK have two #6-32 x .44 Tapped Mounting Holes on each end.
See page 1.16 for Mounting Bolts.
Push area = .20
See chart for Spring Forces: Preload and End of Stroke.
Seal Kits for Series:
Original = 5-SK
"T" = 5-SKG

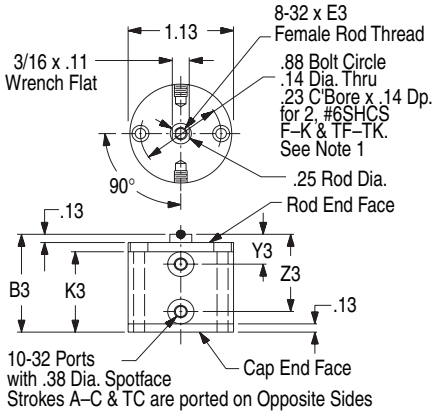

Action –OP
Single Acting
Spring Extended

See page 1.16 for Mounting Bolts.
Pull area = .15
See Chart for Spring Forces: Preload & End of Stroke
Seal Kits for Series:
Original = 5-SK
"T" = 5-SKG

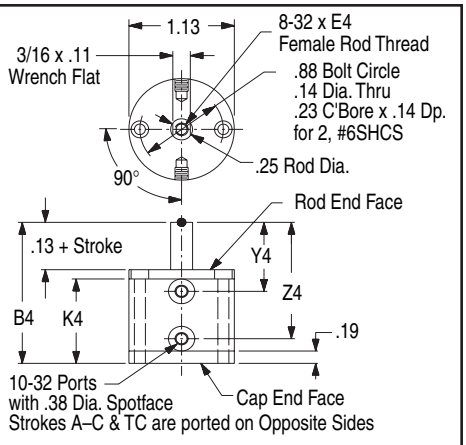

NA* = Not Available

1

Prefix Option -M Metric Cylinder & Rod Thread, 12.7mm Bore
Available on Original and "T" Series with Actions: -X, -O, -OP
Also see *Option Information* on page 1.7.

Original Series

Stroke mm	1.6	3.2	6.4	9.5	12.7	15.9	19.1	25.4	31.8	38.1	50.8	76.2	101.6
Stroke Letter	A	B	C	D	E	F	G	H	I	J	K	L	M

"T" Series

Stroke mm	3.2	6.4	9.5	12.7	15.9	25.4	31.8	38.1	50.8	76.2	101.6
Stroke Letter	TC	TD	TE	TF	TG	TH	TI	TJ	TK	TL	TM

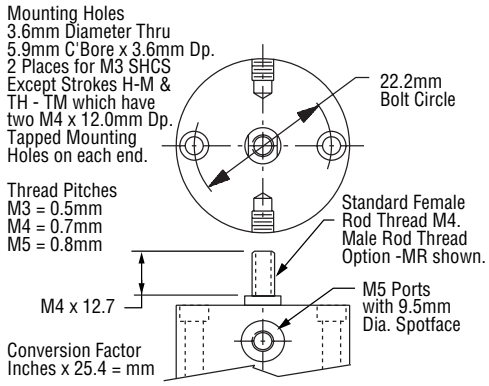

The **Suffix Options** charted on the right are available on Original & "T" Series with the Actions indicated (✓). They require no dimensional changes from the Standard Specifications on page 1.18. – *Also see Option Information on pages 1.7 thru 1.15.*

	V	Q	N	C1–C7	BF	BR	BFR
-X	✓	✓	✓	✓	✓	✓	✓
-O	✓	✓	✓	✓	NA	✓	NA
-OP	✓	✓	✓	✓	✓	NA	NA

Suffix Options -PM & -SM Clevis Mount
Available on Original and "T" Series
with Actions: -X, -O, -OP
Also see *Option Information* on page 1.13.

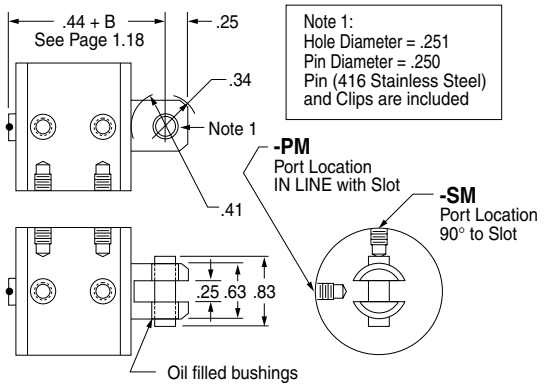

Suffix Options -EPM & -ESM Eye Mount
Available on Original and "T" Series
with Actions: -X, -O, -OP
Also see *Option Information* on page 1.13.

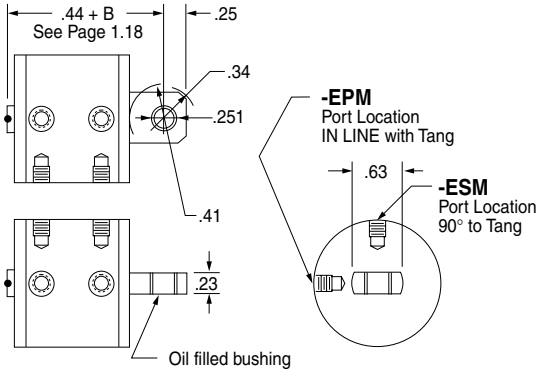

EM-04 Eye Bracket Kit
Mates with Clevis Mount above.
Order separately.

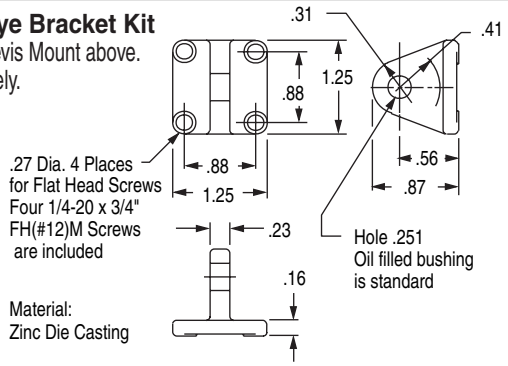

PM-04 Clevis Bracket Kit
Mates with Eye Mount above.
Order separately.

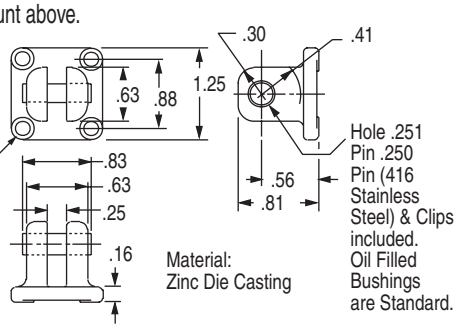

RC-16 Rod Clevis and Pin
Threaded Stud mates with
Female Rod thread
in ***Pancake®*** Cylinders.
Slot & Pin Mate with
EM-02 Eye Bracket
shown on the right.

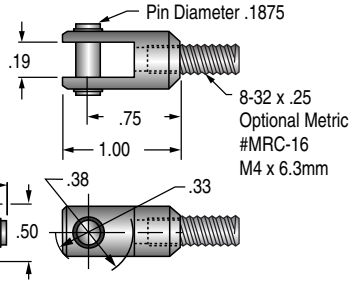

Materials:
Clevis – Steel, Black Oxide
Stud – Steel
Pin – 416 Stainless Steel
Pin & Clips are included

EM-02 Eye Bracket Kit
Mates RC-16
Rod Clevis shown
on the left.

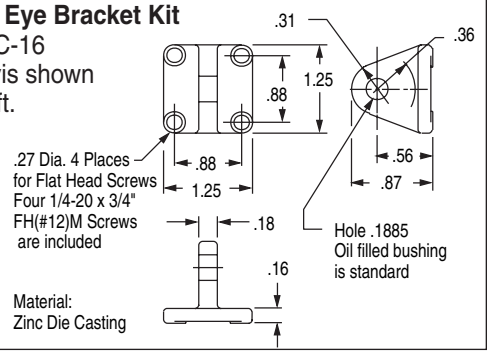

Suffix Option -RS Adjustable Retract Stroke

Available on Original and "T" Series with Actions -X, -O, -OP. Also see Option Information on page 1.11

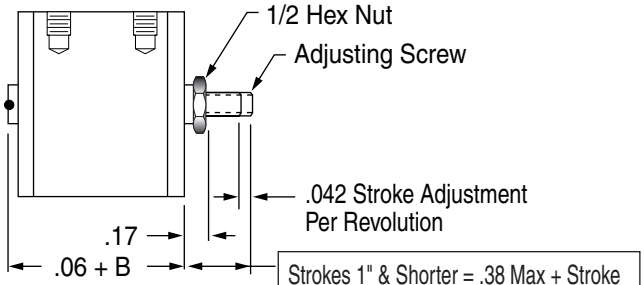

Strokes 1" & Shorter = .38 Max + Stroke
Strokes 1" & Longer = .38 + Adjustment
Standard Adjustment is 1".

-OP only use B4 as shown on page 1.18. No additional length is required

Suffix Option -F Threaded Nose Mount

Available on Original and "T" Series with Actions -X, -O, -OP. Also see Option Information on page 1.13

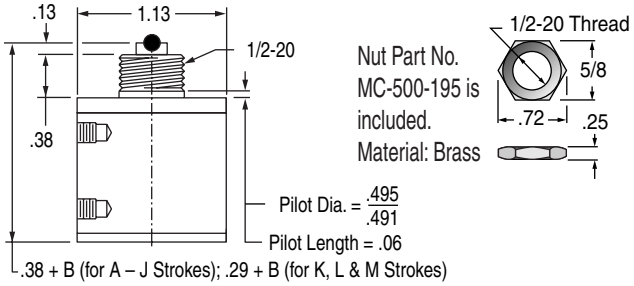

Accessory – Plated steel nose mounting brackets

Must be ordered separately

Angled Part Number **BRK-201**

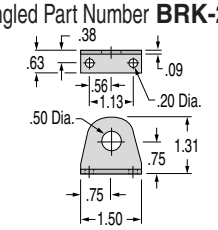

Flat Part Number **BRK-202**

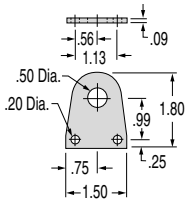

Suffix Option -NR Nonrotating, Single Acting

Available on Original and "T" Series with Action -O. Also see Option Information on page 1.8

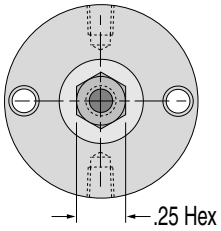

Stainless Steel Piston Rod

Suffix Option -K Nonrotating, Double Acting

Available on Original and "T" Series with Action -X, -O, -OP.

*Rotational Tolerance with Piston Rod Fully Retracted (Clamp near Body) is ±1°. Cylinder is not intended to carry **any** rotational load.*

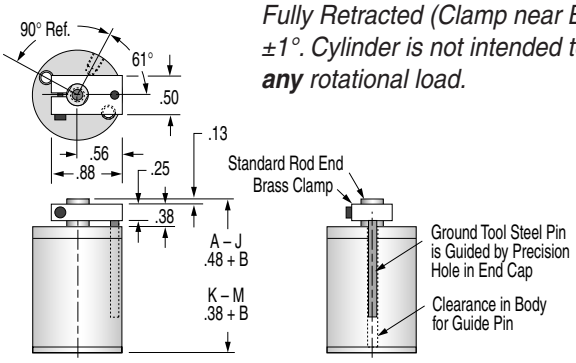

Suffix Option -MR Male Rod Thread

Available on Original and "T" Series with Actions -X, -O, -OP. Also see Option Information on page 1.8

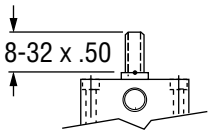

Suffix Option -E *Specifies Magnetic Piston and Dovetail Mounting Slot(s)*

Strokes are NOT affected by Magnetic Piston Option

– Sensors Must be Ordered Separately See Sensor Models Available page 1.14

1/2" (5) Bore

Sensors available for "D" & "TD" strokes and longer. Strokes D & TD are ported on opposite sides.

Note:
Alloy steel mounting bolts may effect sensing. Stainless steel or other nonmagnetic bolts are recommended.

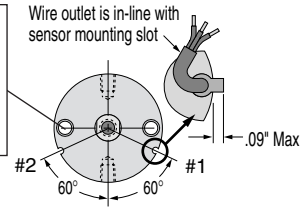

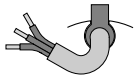

Profile of Sensor & Keyway Slot. Wire is in line with slot.

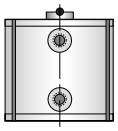

Quick Reference to Standard Strokes
Use the appropriate Stroke Letter in the Model Number

	Available on Original Series		Available on "T" Series	
	Stroke	Action X	Stroke	Action X
Sensor Slots at Positions #1 and #2	3/8	D	1/4	TD
	1/2	E	3/8	TE
	5/8	F	1/2	TF
	3/4	G	5/8	TG
	1	H	1	TH
	1 1/4	I	1 1/4	TI
	1 1/2	J	1 1/2	TJ
Sensor Slot at Position #1 only	2	K	2	TK
	3	L	3	TL
	4	M	4	TM

1

Action –XDR Original Series
Double Rod, Double Acting

Note 1:
Strokes H – M have two #6-32 x .44 Tapped Mounting Holes on each end.

See page 1.16 for Mounting Bolts
Force Area = .15
Seal Kit = 5-SK

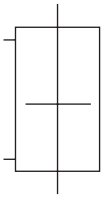

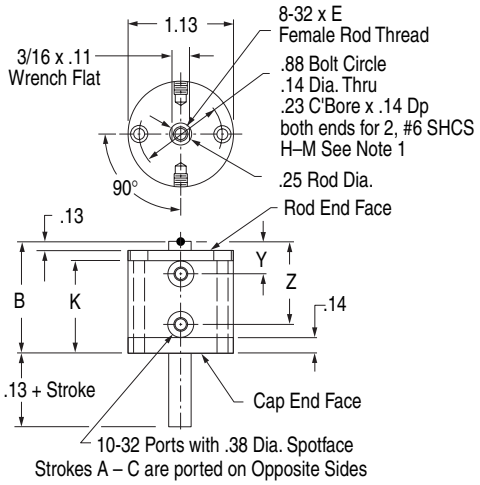

Stroke, Inches	1/16	1/8	1/4	3/8	1/2	5/8	3/4	1	1-1/4	1-1/2	2	3	4
Stroke, Letter	A	B	C	D	E	F	G	H	I	J	K	L	M
B	1.00	1.00	1.13	1.25	1.38	1.50	1.63	1.88	2.13	2.38	2.88	3.88	4.88
E	.25	.25	.25	.38	.38	.38	.38	.38	.38	.38	.38	.38	.38
K	.73	.73	.86	.98	1.11	1.23	1.36	Note 1	Note 1	Note 1	Note 1	Note 1	Note 1
Y	.46	.46	.46	.46	.46	.46	.46	.46	.46	.46	.46	.46	.46
Z	.67	.67	.80	.92	1.05	1.17	1.30	1.55	1.80	2.05	2.55	3.55	4.55
Weight, lb.	.09	.10	.11	.12	.13	.14	.16	.18	.21	.24	.31	.41	.52

Action –ODR Original Series
Double Rod, Single Acting, Spring Retracted

Note 1:
Strokes F – K have two #6-32 x .44 Tapped Mounting Holes on each end.

See page 1.16 for Mounting Bolts
Force Area = .15
Seal Kit = 5-SK

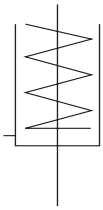

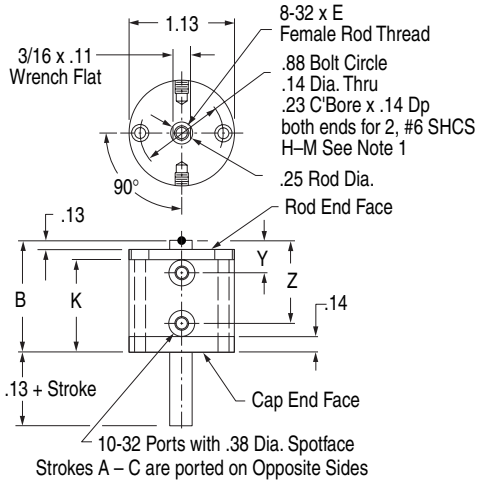

Stroke, Inches	1/16	1/8	1/4	3/8	1/2	5/8	3/4	1	1 1/4	1 1/2	2
Stroke, Letter	A	B	C	D	E	F	G	H	I	J	K
B	1.00	1.13	1.25	1.55	1.67	1.88	2.38	2.88	2.88	3.88	3.88
E	.25	.25	.25	.38	.38	.38	.38	.38	.38	.38	.38
K	.73	.86	.98	1.28	1.40	Note 1	Note 1	Note 1	Note 1	Note 1	Note 1
Y	.46	.46	.46	.46	.46	.46	.46	.46	.46	.46	.46
Z	.67	.80	.92	1.22	1.34	1.55	2.05	2.55	2.55	3.55	3.55
Weight, lb.	.09	.10	.13	.15	.16	.19	.24	.30	.30	.40	.40
Spring Return											
Preload	2.0	2.0	0.9	1.2	0.7	1.9	1.2	1.0	1.7	1.3	1.3
End of Stroke	3.2	3.2	3.2	3.2	3.2	3.5	3.2	3.5	5.9	5.3	6.7

Suffix Option -E *Specifies Magnetic Piston and Dovetail Mounting Slot(s)*

Strokes are NOT affected by Magnetic Piston Option

– Sensors Must be Ordered Separately
See Sensor Models Available page 1.14

1/2" (5) Bore

Note:
Alloy steel mounting bolts may effect sensing. Stainless steel or other non-magnetic bolts are recommended.

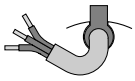

Profile of Sensor & Keyway Slot. Wire is in line with slot.

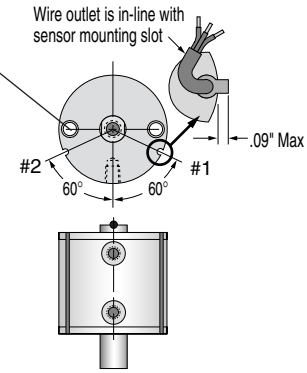

Quick Reference to Standard Strokes
Use the appropriate Stroke Letter in the Model Number

Available on Original Series

	Stroke	Action XDR
Sensor Slots at Positions #1 and #2	3/8	D
	1/2	E
	5/8	F
	3/4	G
	1	H
	1 1/4	I
	1 1/2	J
Sensor Slot at Position #1 only	2	K
	3	L
	4	M

Prefix Option -M Metric Cylinder & Rod Thread, 12.7mm Bore
Available on Original Series with Actions: -XDR, -ODR
Also see *Option Information* on page 1.7.

Stroke mm	1.6	3.2	6.4	9.5	12.7	15.9	19.1	25.4	31.8	38.1	50.8	76.2	101.6
Stroke Letter	A	B	C	D	E	F	G	H	I	J	K	L	M

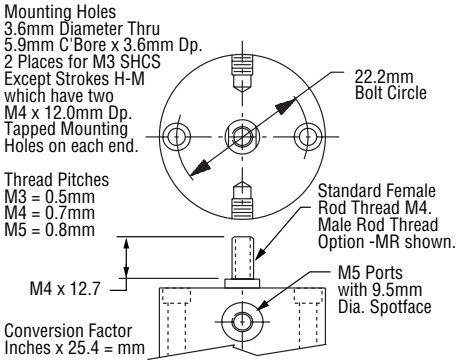

The **Suffix Options** charted on the right are available on Original Series with the Actions indicated (✓). They require no dimensional changes from the Standard Specifications on page 1.21. – *Also see Option Information on pages 1.7 thru 1.15.*

	V	Q	N	C1–C7	BF	BR	BFR	06
-XDR	✓	✓	✓	✓	✓	✓	✓	✓
-ODR	✓	✓	✓	✓	NA	✓	NA	✓

Suffix Option -MR, -MR1, -MR2
Male Rod Thread
Available on Original Series with Actions -XDR, -ODR.
For Rod End only use –MR
For Cap End only use –MR1
For Both Ends use –MR2
Also see Option Information on Page 1.8

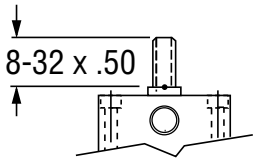

Suffix Option -NR Nonrotating, Single Acting
Available on Original Series with Action -ODR
Also see *Option Information* on page 1.8.

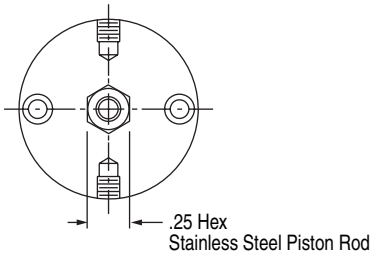

Suffix Option -F, -F1, -F2 Threaded Nose Mount (See info page 1.13)
Available on Original Series with Actions -XDR, -ODR.
*For Rod End only use **-F***
*For Cap End only use **-F1***
*For Both Ends use **-F2***

Nut.
Part No. MC-500-195 is included.
Material: Brass

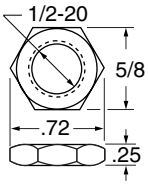

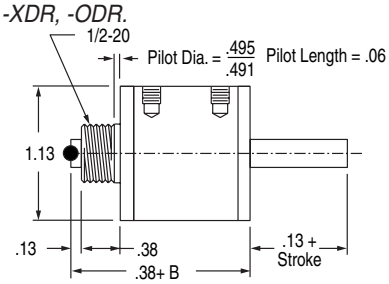

Accessory Nose Mounting Brackets
Order separately – Material Plated Steel

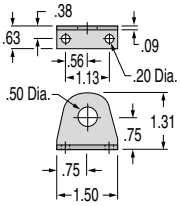

Part No: BRK-201

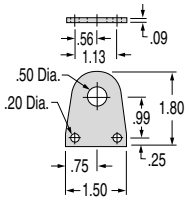

Part No: BRK-202

Suffix Option -K
Nonrotating, Double Acting
Available on Original Series with Actions: -XDR, -ODR.

Rotational Tolerance with Piston Rod Fully Retracted (Clamp near Body) is ±1°.

*Cylinder is not intended to carry **any** rotational load.*

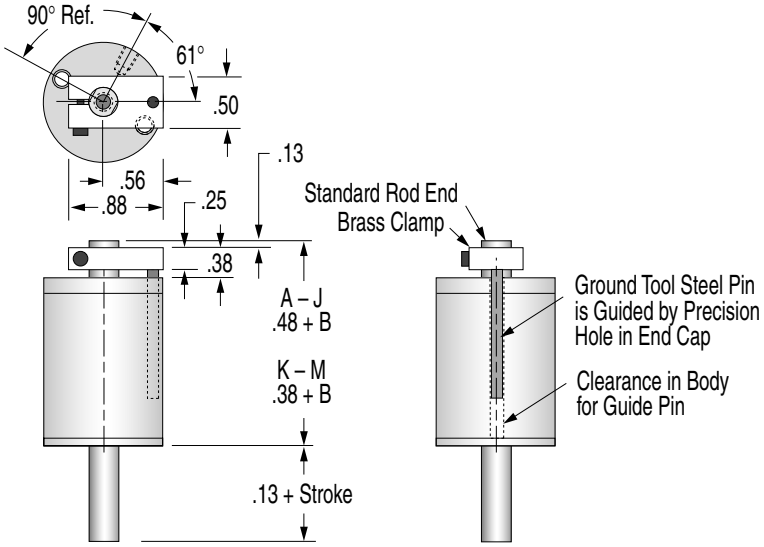

1

Model Number Code

Prefix Options	Stroke		Bore		Action		Suffix Options
Leave blank if none desired	TE	–	7	–	X	–	MR

Metric	M
See pages 1.7, 1.25, 1.28	

Bore	Code
3/4"	7
19.1mm	7

Standard Strokes

Note 1: For action XK strokes A – G are decreased by 1/8" from those shown (Original Series only).

Note 2: For action XDRK strokes A – M are decreased by 1/8" from those shown (Original Series only).

Original Series

Action	X XK[1] XDR XDRK[2]	O ODR	OP
Stroke			
1/16	A	A	A
1/8	B	B	B
1/4	C	C	C
3/8	D	D	D
1/2	E	E	E
5/8	F	F	–
3/4	G	G	–
1	H	H	–
1 1/4	I	I	–
1 1/2	J	J	–
2	K	K	–
3	L	–	–
4	M	–	–

"T" Series Includes PTFE piston bearing

Action	X, XK	O	OP
Stroke			
1/8	TC	TC	TC
1/4	TD	TD	TD
3/8	TE	TE	TE
1/2	TF	TF	–
5/8	TG	TG	–
1	TH	TH	–
1 1/4	TI	TI	–
1 1/2	TJ	TJ	–
2	TK	TK	–
3	TL	–	–
4	TM	–	–

Grey shading indicates sensors are not available.

Strokes are NOT affected by magnetic piston Option "E"

Action

Single rod

Double acting	**-X**
Double acting, Nonrotating 150 psi max	**-XK**
Single acting, spring retracted	**-O**
Single acting, spring extended	**-OP**

Double rod

Double acting	**-XDR**
Double acting, Nonrotating 150 psi max	**-XDRK**
Single acting, spring retracted	**-ODR**

See pages 1.5 & 1.6 for Action Information.
See pages 1.24 & 1.27 for Standard Specifications

HOW TO ORDER

1. Under ***Stroke*** – select letter(s) for desired Series and Stroke.
2. Under ***Bore*** – select **7** for 3/4" bore.

   Seven Other Bore Sizes are Available

Bore	Bore Code	See page
1/2"	5	1.17
1 1/8"	121	1.29
1 5/8"	221	1.35
2"	321	1.41
2 1/2"	521	1.47
3"	721	1.53
4"	1221	1.59

3. Under ***Action*** – select letter(s) for desired action.
4. Under ***Prefix & Suffix Options***– select letter(s) for desired options and add to model number.

EXAMPLES

E-7-X

Original Series, 1/2" stroke - 3/4" Bore - Single Rod, Double Acting

TE-7-X-MR

"T" Series, 3/8" Stroke - 3/4" Bore - Single Rod, Double Acting - Male Rod Thread

Suffix Options

Male rod thread: Single rod		**-MR**
Double rod, rod end		**-MR**
Double rod, cap end		**-MR1**
Double rod, both ends		**-MR2**
Viton seals		**-V**
Quad seals		**-Q**
External guide, nonrotating for load guiding (See page 1.65)		**-G**
Hex rod nonrotating, single acting models to 2" stroke only		**-NR**
Hole thru double rod shaft : 1/16" hole 150 psi max		**-06**
Finish: **ProCoat™** (Electroless Nickel)		**-N**
Stroke collar: 1/4"	**-C2**	1/8" **-C1**
1/2"	**-C4**	3/8" **-C3**
3/4"	**-C6**	5/8" **-C5**
		7/8" **-C7**
Rubber Bumpers:	Rod end	**-BF**
	Cap end	**-BR**
	Both ends	**-BFR**
Adjustable retract stroke (Over 1" adjustment add desired length, e.g. -RS2)		**-RS**
Clevis mount:	Ports in-line with slot	**-PM**
	Ports 90° to slot	**-SM**
Eye mount:	Ports in-line with tang	**-EPM**
	Ports 90° to tang	**-ESM**
Threaded nose mount: Single rod		**-F**
Double rod, rod end		**-F**
Double rod, cap end		**-F1**
Double rod, both ends		**-F2**
Magnetic piston & sensor mounting slot(s) Order sensors separately. See page 1.14. Stroke length determines number of mounting slots. See page 1.14, 1.26, or 1.28.		**-E**

See pages 1.7 – 1.15 for general option information and pages 1.25, 1.26 & 1.28 for option specifications of 3/4" bore models.

A complete library of cylinder CAD drawings is available from your local Fabco-Air Distributor or from the Fabco-Air web site – http://www.fabco-air.com

Action –X
Double Acting

Note 1:
Strokes H–M & TH–TM have two #8-32 x .44 Tapped Mounting Holes on each end.

See page 1.16 for Mounting Bolts.
Push area = .44
Pull area = .36
Seal Kits for Series:
Original = 7-SK
"T" = 7-SKG

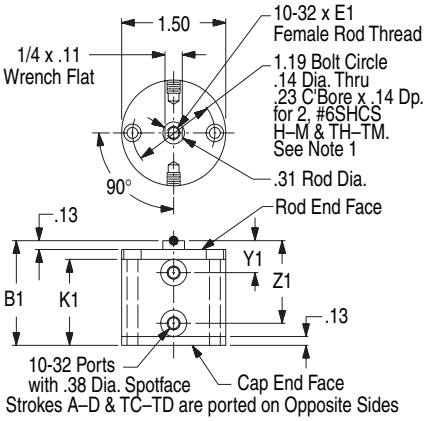

Action –XK
Double Acting
Nonrotating

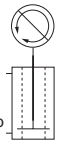

Note 1:
Strokes H–M & TH–TM have two #8-32 x .44 Tapped Mounting Holes on each end.

See page 1.16 for Mounting Bolts.
Push area = .42
Pull area = .34
Seal Kits for Series:
Original = 7-SK-K
"T" = 7-SKG-K

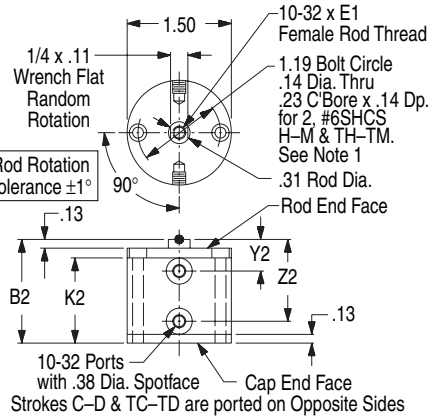

Original Series

Stroke, Inch	1/16	1/8	1/4	3/8	1/2	5/8	3/4	1	1 1/4	1 1/2	2	3	4
Stroke, Letter	A	B	C	D	E	F	G	H	I	J	K	L	M
Action –X Double Acting													
B1	.83	.83	.96	1.08	1.21	1.36	1.49	1.83	2.08	2.33	2.96	3.96	4.96
E1	.25	.25	.25	.38	.38	.38	.38	.38	.38	.38	.38	.38	.38
K1	.56	.56	.69	.81	.94	1.09	1.22	Note 1	Note 1	Note 1	Note 1	Note1	Note 1
Y1	.46	.46	.46	.46	.46	.46	.46	.46	.46	.46	.55	.55	.55
Z1	.52	.52	.65	.77	.89	1.05	1.18	1.52	1.77	2.02	2.65	3.65	4.65
Weight, lb.	.14	.14	.15	.17	.20	.21	.23	.28	.32	.36	.46	.63	.78
Action –XK Double Acting, Nonrotating													
Stroke, Inch	1/8	1/4	3/8	1/2	5/8	1	1 1/4	1 1/2	2	3	4		
Stroke, Letter	C	D	E	F	G	H	I	J	K	L	M		
Use Strokes & Dimensions under "T" Series Action –XK Double Acting													
Action –O Single Acting, Spring Retracted													
B3	.83	.96	1.08	1.36	1.49	1.83	2.33	2.96	2.96	3.96	3.96	NA*	NA*
E3	.25	.25	.38	.38	.38	.38	.38	.38	.38	.38	.38	"	"
K3	.56	.69	.81	1.09	1.22	Note 1	Note 1	Note 1	Note 1	Note 1	Note 1	"	"
Y3	.46	.46	.46	.46	.46	.46	.55	.55	.55	.55	.55	"	"
Z3	.52	.65	.77	1.05	1.18	1.52	2.02	2.65	2.65	3.65	3.65	"	"
Weight,. lb.	.14	.16	.18	.22	.23	.28	.36	.46	.46	.63	.63	"	"
Preload, lb.	2.0	2.7	1.5	2.5	2.0	2.5	2.5	2.2	1.5	1.3	1.3	"	"
End of Stroke, lb.	3.0	4.5	4.5	4.7	4.7	4.8	4.8	4.9	5.0	5.3	6.7	"	"
Action –OP Single Acting, Spring Extended													
B4	.95	1.16	1.39	1.80	2.05	NA*	NA*	NA*	NA*	NA*	NA*	NA*	NA*
E4	.25	.25	.25	.38	.38	"	"	"	"	"	"	"	"
K4	.63	.77	.88	1.16	1.29	"	"	"	"	"	"	"	"
Y4	.52	.58	.71	.83	.96	"	"	"	"	"	"	"	"
Z4	.64	.85	1.08	1.49	1.74	"	"	"	"	"	"	"	"
Weight, lb.	.14	.16	.18	.22	.24	"	"	"	"	"	"	"	"
Preload, lb.	2.0	2.7	1.5	2.5	2.0	"	"	"	"	"	"	"	"
End of Stroke, lb.	3.0	4.5	4.5	4.7	4.7	"	"	"	"	"	"	"	"

"T" Series

Stroke, Inch	1/8	1/4	3/8	1/2	5/8	1	1 1/4	1 1/2	2	3	4
Stroke, Letter	TC	TD	TE	TF	TG	TH	TI	TJ	TK	TL	TM
Action –X Double Acting											
B1	.96	1.08	1.21	1.36	1.49	1.83	2.08	2.33	2.96	3.96	4.96
E1	.25	.38	.38	.38	.38	.38	.38	.38	.38	.38	.38
K1	.69	.81	.94	1.09	1.22	Note 1	Note 1	Note 1	Note 1	Note 1	Note 1
Y1	.46	.46	.46	.46	.46	.46	.46	.46	.55	.55	.55
Z1	.65	.77	.89	1.05	1.18	1.52	1.77	2.02	2.65	3.65	4.65
Weight, lb.	.15	.17	.20	.21	.23	.28	.32	.36	.46	.63	.78
Action –XK Double Acting, Nonrotating											
B2	.96	1.08	1.21	1.36	1.49	1.83	2.08	2.33	2.96	3.96	4.96
E2	.25	.38	.38	.38	.38	.38	.38	.38	.38	.38	.38
K2	.69	.81	.94	1.09	1.22	Note 1	Note 1	Note 1	Note 1	Note 1	Note 1
Y2	.46	.46	.46	.46	.46	.46	.46	.46	.55	.55	.55
Z2	.65	.77	.89	1.05	1.18	1.52	1.77	2.02	2.65	3.65	4.65
Weight, lb.	.15	.18	.21	.22	.24	.29	.33	.37	.48	.65	.81
Action –O Single Acting, Spring Retracted											
B3	1.08	1.36	1.49	1.83	2.33	2.96	2.96	3.96	3.96	NA*	NA*
E3	.38	.38	.38	.38	.38	.38	.38	.38	.38	"	"
K3	.81	1.09	1.22	Note 1	Note 1	Note 1	Note 1	Note 1	Note 1	"	"
Y3	.46	.46	.46	.46	.46	.55	.55	.55	.55	"	"
Z3	.77	1.05	1.18	1.52	2.02	2.65	2.65	3.65	3.65	"	"
Weight,. lb.	.18	.22	.23	.28	.28	.46	.46	.63	.63	"	"
Preload, lb.	2.8	1.5	2.5	2.5	2.5	1.5	1.2	1.3	1.3	"	"
End of Stroke, lb.	4.5	4.5	4.8	4.8	4.8	4.9	5.0	5.3	6.7	"	"
Action –OP Single Acting, Spring Extended											
B4	1.26	1.67	1.92	NA*	NA*	NA*	NA*	NA*	NA*	NA*	NA*
E4	.25	.25	.38	"	"	"	"	"	"	"	"
K4	.88	1.16	1.29	"	"	"	"	"	"	"	"
Y4	.58	.70	.83	"	"	"	"	"	"	"	"
Z4	.95	1.36	1.61	"	"	"	"	"	"	"	"
Weight, lb.	.18	.22	.24	"	"	"	"	"	"	"	"
Preload, lb.	1.5	2.5	2.0	"	"	"	"	"	"	"	"
End of Stroke, lb.	4.5	4.8	4.8	"	"	"	"	"	"	"	"

Action –O
Single Acting
Spring Retracted

Note 1:
Strokes F–K & TF–TK have two #8-32 x .44 Tapped Mounting Holes on each end.
See page 1.16 for Mounting Bolts.
Push area = .44
See chart for Spring Forces: Preload and End of Stroke.
Seal Kits for Series:
Original = 7-SK
"T" = 7-SKG

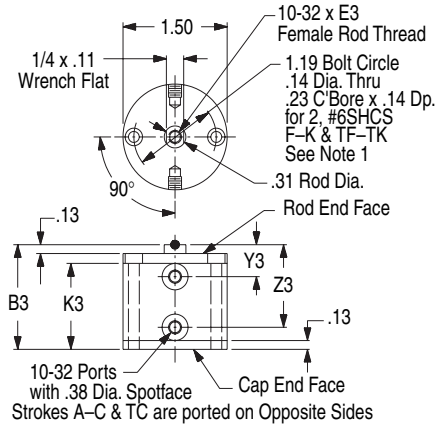

Action –OP
Single Acting
Spring Extended

See page 1.16 for Mounting Bolts.
Pull area = .36
See Chart for Spring Forces: Preload & End of Stroke
Seal Kits for Series:
Original = 7-SK
"T" = 7-SKG

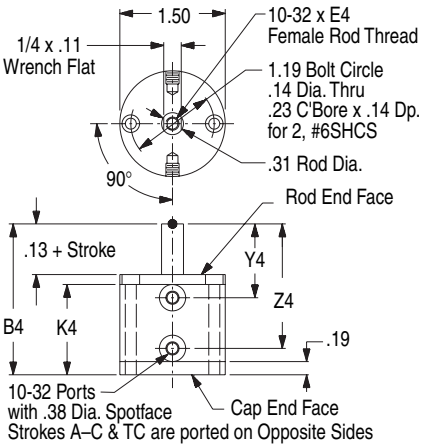

1

Prefix Option -M Metric Cylinder & Rod Thread, 19.1mm Bore

Available on Original and "T" Series with Actions: -X, -XK, -O, -OP
Also see *Option Information* on page 1.7.

Original Series

Stroke mm	1.6	3.2	6.4	9.5	12.7	15.9	19.1	25.4	31.8	38.1	50.8	76.2	101.6
Stroke Letter	A	B	C	D	E	F	G	H	I	J	K	L	M

"T" Series

Stroke mm	3.2	6.4	9.5	12.7	15.9	25.4	31.8	38.1	50.8	76.2	101.6
Stroke Letter	TC	TD	TE	TF	TG	TH	TI	TJ	TK	TL	TM

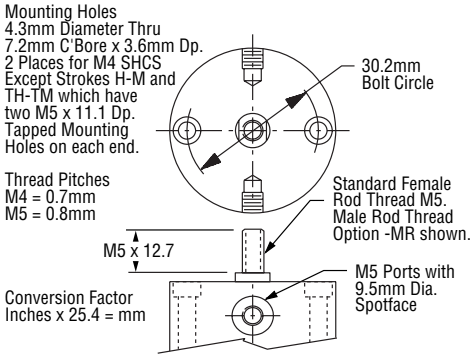

The **Suffix Options** charted on the right are available on Original & "T" Series with the Actions indicated (✓). They require no dimensional changes from the Standard Specifications on page 1.24. – *Also see Option Information on pages 1.7 thru 1.15.*

	V	Q	N	C1–C7	BF	BR	BFR
-X	✓	✓	✓	✓	✓	✓	✓
-XK	✓	✓	✓	✓	✓	✓	✓
-O	✓	✓	✓	✓	NA	✓	NA
-OP	✓	✓	✓	✓	✓	NA	NA

Suffix Options -PM & -SM Clevis Mount

Available on Original and "T" Series
with Actions: -X, -XK, -O, -OP
Also see *Option Information* on page 1.13.

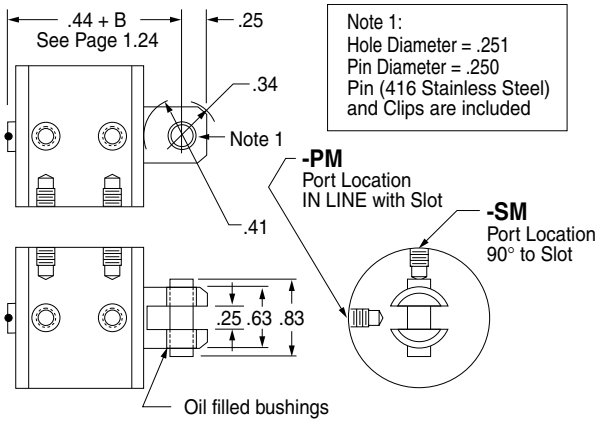

Suffix Options -EPM & -ESM Eye Mount

Available on Original and "T" Series
with Actions: -X, -XK, -O, -OP
Also see *Option Information* on page 1.13.

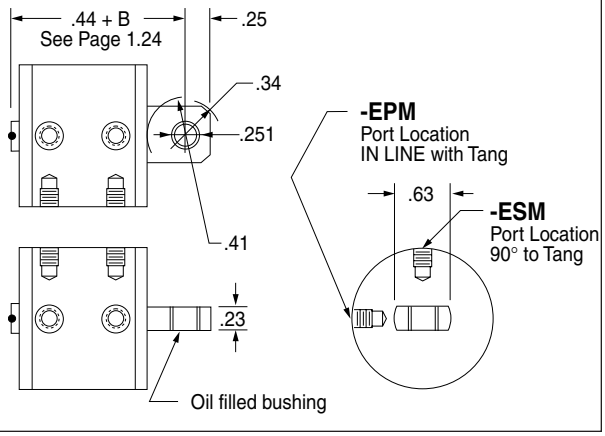

EM-04 Eye Bracket Kit

Mates with Clevis Mount above.
Order separately.

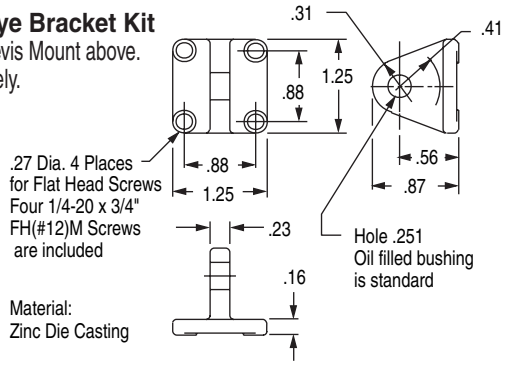

PM-04 Clevis Bracket Kit

Mates with Eye Mount above.
Order separately.

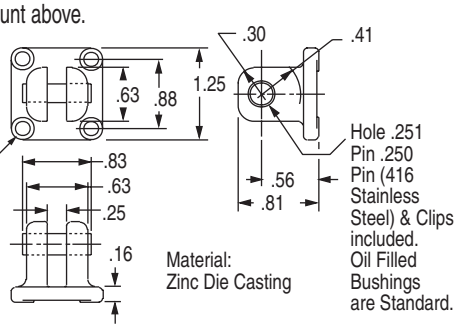

RC-19 Rod Clevis and Pin

Threaded Stud mates with Female Rod thread in ***Pancake®*** Cylinders. Slot & Pin Mate with EM-02 Eye Bracket shown on the right.

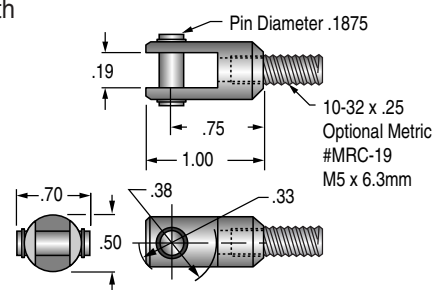

Materials:
Clevis – Steel, Black Oxide
Stud – Steel
Pin – 416 Stainless Steel
Pin & Clips are included

EM-02 Eye Bracket Kit

Mates RC-19
Rod Clevis shown
on the left.

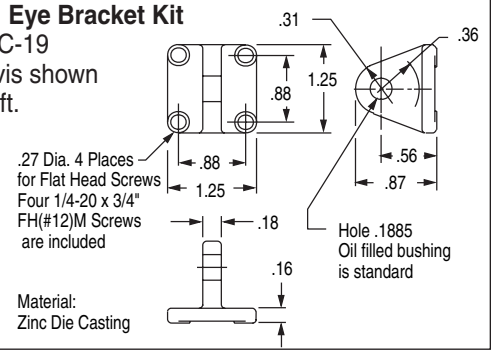

Suffix Option -MR **Male Rod Thread**

Available on Original and "T" Series with Actions: -X, -XK, -O, -OP. Also see *Option Information* on page 1.8.

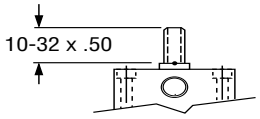

Suffix Option -RS **Adjustable Retract Stroke**

Available on Original and "T" Series with Actions: -X, -XK, -O, -OP
Also see *Option Information* on page 1.11.

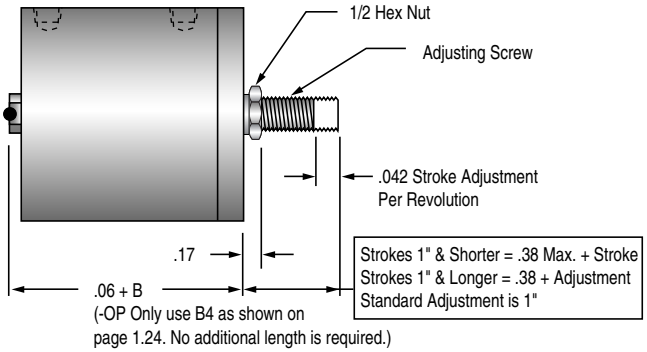

Suffix Option -F **Threaded Nose Mount**

Available on Original and "T" Series with Actions: -X, -XK, -O, -OP
Also see *Option Information* on page 1.13.

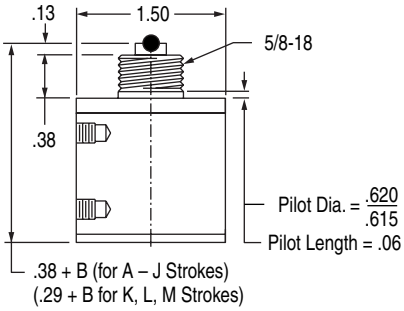

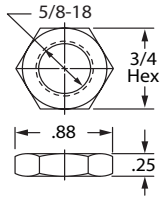

Part No. MC-700-195
Mounting Nut is included
Material: Brass

Suffix Option -NR **Nonrotating, Single Acting**

Available on Original and "T" Series with Action -O
Also see *Option Information* on page 1.8.

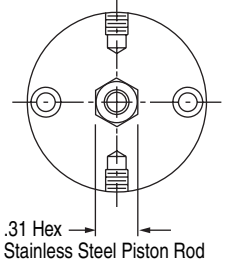

Accessory Nose Mounting Brackets

Order Separately. Material: Plated Steel

Angled Part Number **BRK-301**

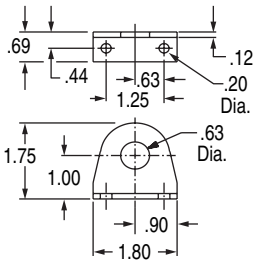

Flat Part Number **BRK-302**

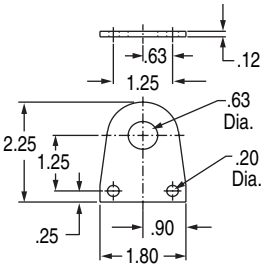

Suffix Option -E ***Specifies Magnetic Piston and Dovetail Mounting Slot(s)***

Strokes are NOT affected by Magnetic Piston Option

– Sensors Must be Ordered Separately See Sensor Models Available page 1.14

Note:
Alloy steel mounting bolts may effect sensing. Stainless steel or other non-magnetic bolts are recommended.

3/4" (7) Bore

Sensors available for "D" & "TD" strokes and longer. Strokes D & TD are ported on opposite sides.

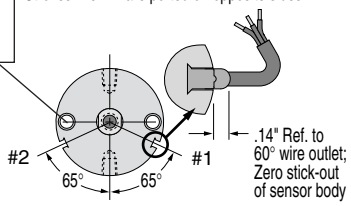

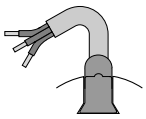

1/4" 60° Dovetail Profile of Sensor & Mounting Slot.

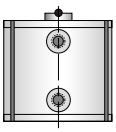

Quick Reference to Standard Strokes
Use the appropriate Stroke Letter in the Model Number

	Available on Original Series		Available on "T" Series	
	Stroke	Action X, XK[1]	Stroke	Action X, XK
Sensor Slots at Positions #1 and #2	3/8	D	1/4	TD
	1/2	E	3/8	TE
	5/8	F	1/2	TF
	3/4	G	5/8	TG
	1	H	1	TH
	1 1/4	I	1 1/4	TI
	1 1/2	J	1 1/2	TJ
Sensor Slot at Position #1 only	2	K	2	TK
	3	L	3	TL
	4	M	4	TM

Note 1: *For Action XK strokes D–G are decreased by 1/8" for those shown for Original Series. There is no decrease in stroke for "T" Series.*

1

Action –XDR Original Series
Double Rod, Double Acting

Note 1:
Strokes H – M have two #8-32 x .44 Tapped Mounting Holes on each end.

See page 1.16 for Mounting Bolts
Force Area = .36
Seal Kit = 7-SK

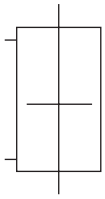

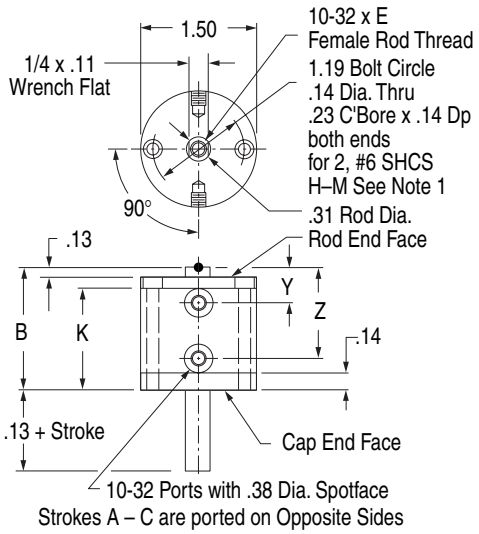

Stroke, Inches	1/16	1/8	1/4	3/8	1/2	5/8	3/4	1	1-1/4	1-1/2	2	3	4
Stroke, Letter	A	B	C	D	E	F	G	H	I	J	K	L	M
B	1.00	1.00	1.13	1.25	1.38	1.50	1.63	1.88	2.13	2.38	2.88	3.88	4.88
E	.25	.25	.25	.38	.38	.38	.38	.38	.38	.38	.38	.38	.38
K	.73	.73	.86	.98	1.11	1.23	1.36	Note 1	Note 1	Note 1	Note 1	Note 1	Note 1
Y	.46	.46	.46	.46	.46	.46	.46	.46	.46	.46	.46	.46	.46
Z	.67	.67	.80	.92	1.05	1.17	1.30	1.55	1.80	2.05	2.55	3.55	4.55
Weight, lb.	.16	.16	.19	.22	.23	.26	.28	.32	.36	.41	.49	.69	.86

Action –XDRK Original Series
Double Rod, Double Acting, Nonrotating

Note 1:
Strokes H – M have two #8-32 x .44 Tapped Mounting Holes on each end.

See page 1.16 for Mounting Bolts
Force Area = .35
Seal Kit = 7-SK-K

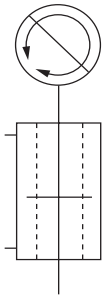

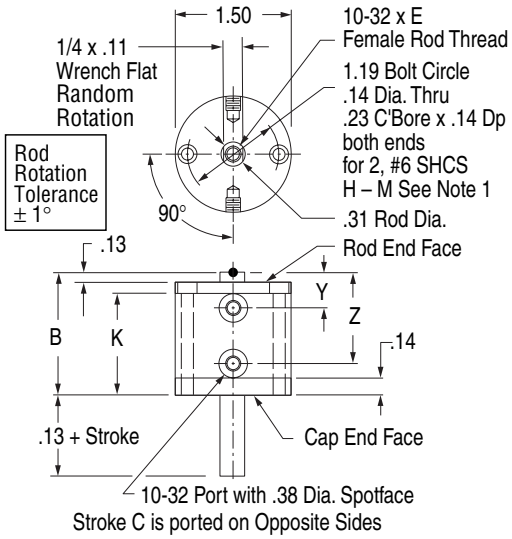

Stroke, Inches	1/8	1/4	3/8	1/2	5/8	7/8	1 1/8	1 3/8	1 7/8	2 7/8	3 7/8
Stroke, Letter	C	D	E	F	G	H	I	J	K	L	M
B	1.13	1.25	1.38	1.50	1.63	1.88	2.13	2.38	2.88	3.88	4.88
E	.25	.38	.38	.38	.38	.38	.38	.38	.38	.38	.38
K	.86	.98	1.11	1.23	1.36	Note 1	Note 1	Note 1	Note 1	Note 1	Note 1
Y	.46	.46	.46	.46	.46	.46	.46	.46	.46	.46	.46
Z	.80	.92	1.05	1.17	1.30	1.55	1.80	2.05	2.55	3.55	4.55
Weight, lb.	.20	.22	.24	.27	.29	.33	.37	.43	.51	.71	.89

Action –ODR Original Series
Double Rod, Single Acting, Spring Retracted

Note 1:
Strokes F – K have two #8-32 x .44 Tapped Mounting Holes on each end.

See page 1.16 for Mounting Bolts
Force Area = .36
Seal Kit = 7-SK

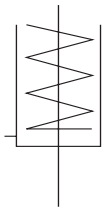

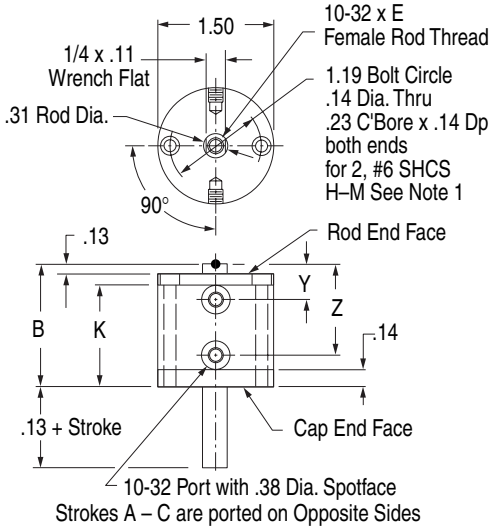

Stroke, Inches	1/16	1/8	1/4	3/8	1/2	5.8	3/4	1	1 1/4	1 1/2	2
Stroke, Letter	A	B	C	D	E	F	G	H	I	J	K
B	1.00	1.13	1.25	1.55	1.67	1.88	2.38	2.88	2.88	3.88	3.88
E	.25	.25	.25	.38	.38	.38	.38	.38	.38	.38	.38
K	.73	.86	.98	1.28	1.40	Note 1	Note 1	Note 1	Note 1	Note 1	Note 1
Y	.46	.46	.46	.46	.46	.46	.46	.46	.46	.46	.46
Z	.67	.80	.92	1.22	1.34	1.55	2.05	2.55	2.55	3.55	3.55
Weight, lb.	.16	.19	.20	.22	.23	.33	.43	.51	.51	.71	.71
Spring Return											
Preload	2.0	2.8	1.5	2.5	2.0	2.5	2.5	2.2	1.5	1.3	1.3
End of Stroke	3.0	4.5	4.5	4.8	4.8	4.8	4.8	4.9	5.0	5.3	6.7

Prefix Option -M Metric Cylinder & Rod Thread, 19.1mm Bore
Available on Original Series with Actions: -XDR, -XDRK, -ODR
Also see *Option Information* on page 1.7.

Action	-XDR & -ODR											-XDR	
Stroke mm	1.6	3.2	6.4	9.5	12.7	15.9	19.1	25.4	31.8	3.81	50.8	76.2	101.6
Stroke Letter	A	B	C	D	E	F	G	H	I	J	K	L	M
Action -XDRK													
Stroke mm	NA	NA	3.2	6.3	9.5	12.7	15.9	22.2	28.6	34.9	47.6	73.0	98.4
Stroke Letter	A	B	C	D	E	F	G	H	I	J	K	L	M

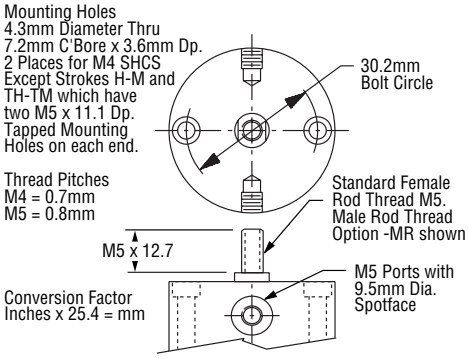

The **Suffix Options** charted on the right are available on Original Series with the Actions indicated (✓). They require no dimensional changes from the Standard Specifications on page 1.27. – *Also see Option Information on pages 1.7 thru 1.15.*

	V	Q	N	C1–C7	BF	BR	BFR	06
-XDR	✓	✓	✓	✓	✓	✓	✓	✓
-XDRK	✓	✓	✓	✓	✓	✓	✓	✓
-ODR	✓	✓	✓	✓	NA	✓	NA	✓

Suffix Option -MR, -MR1, -MR2 Male Rod Thread
Available on Original Series with Actions -XDR, -XDRK, -ODR.
For Rod End only use **–MR**
For Cap End only use **–MR1**
For Both Ends use **–MR2**
Also see Option Information on Page 1.8

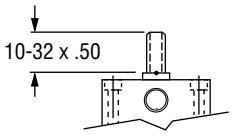

Suffix Option -NR
Nonrotating, Single Acting
Available on Original Series with Actions: -ODR
Also see *Option Information* on page 1.8.

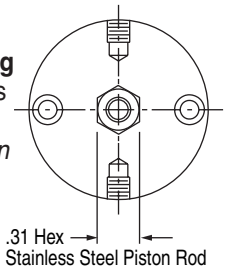

Suffix Option -F, -F1, -F2
Threaded Nose Mount
Available on Original Series with Actions -XDR, -XDRK, -ODR.
For Rod End only use **-F**
For Cap End only use **-F1**
For Both Ends use **-F2**
Also see Option Information on page 1.13

Nut Part No. MC-700-195 is included. Material: Brass

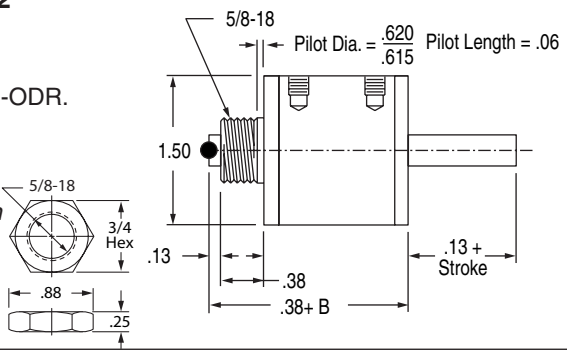

Accessory Nose Mounting Brackets
Order Separately. Material Plated Steel

BRK-301

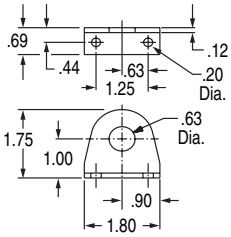

BRK-302

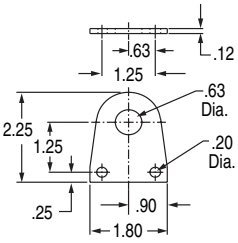

Suffix Option -E ***Specifies Magnetic Piston and Dovetail Mounting Slot(s)***
Strokes are NOT affected by Magnetic Piston Option

– Sensors Must be Ordered Separately
See Sensor Models Available page 1.14

3/4" (7) Bore

Note:
Alloy steel mounting bolts may effect sensing. Stainless steel or other non-magnetic bolts are recommended.

Sensors available for "D" strokes and longer.

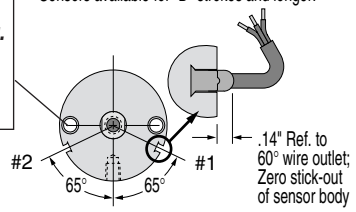

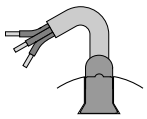

1/4" 60° Dovetail Profile of Sensor & Mounting Slot.

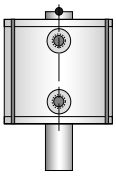

Quick Reference to Standard Strokes
Use the appropriate Stroke Letter in the Model Number

Available on Original Series

	Stroke	Action XDR, XDRK[2]
Sensor Slots at Positions #1 and # 2	3/8	D
	1/2	E
	5/8	F
	3/4	G
	1	H
	1 1/4	I
	1 1/2	J
Sensor Slot at Position #1 only	2	K
	3	L
	4	M

Note 2: *For Action XDRK strokes D–M are decreased by 1/8" for those shown for Original Series.*

1

Model Number Code

Prefix Options	Stroke		Bore		Action		Suffix Options
Leave blank if none desired	D	–	121	–	X	–	MR

Metric	M
See pages 1.7, 1.31 & 1.34	

Bore	Code
1 1/8"	121
28.5mm	121

Standard Strokes

Original Series

Action	X XK XDR XDRK	O ODR	OP
Stroke			
1/8	A	A	A
3/16	B	B	B
1/4	C	C	C
1/2	D*	D	D
3/4	X	X	X
1	E	E	E
1 1/4	F	F	F
1 1/2	G	G	G
1 3/4	H	H	–
2	I	I	–
3	J	–	–
4	K	–	–

"T" Series Includes PTFE piston bearing

Action	X XK	O	OP
Stroke			
1/16	TB	TB	TB
1/8	TC	TC	TC
3/8	TD*	TD	TD
5/8	TX	TX	TX
7/8	TE	TE	TE
1 1/8	TF	TF	TF
1 3/8	TG	TG	TG
1 5/8	TH	TH	–
1 7/8	TI	TI	–
2 7/8	TJ	–	–
3 7/8	TK	–	–

Grey shading indicates sensors are not available.

Strokes are NOT affected by magnetic piston Option "E"

*** Note – Sensors not available:**
D-121-XK, TD-121-XK, D-121-XDRK

Action

Single rod

Double acting	**-X**
Double acting, Nonrotating Internal guide pins - 150 psi max	**-XK**
Single acting, spring retracted	**-O**
Single acting, spring extended	**-OP**

Double rod

Double acting	**-XDR**
Double acting, Nonrotating Internal guide pins - 150 psi max	**-XDRK**
Single acting, spring retracted	**-ODR**

See pages 1.5 & 1.6 for Action Information.
See pages 1.30 & 1.33 for Standard Specifications

HOW TO ORDER

1. Under ***Stroke*** – select letter(s) for desired Series and Stroke.
2. Under ***Bore*** – select **121** for 1 1/8" bore.
   Seven Other Bore Sizes are Available

Bore	Bore Code	See page
1/2"	5	1.17
3/4"	7	1.23
1 5/8"	221	1.35
2"	321	1.41
2 1/2"	521	1.47
3"	721	1.53
4"	1221	1.59

3. Under ***Action*** – select letter(s) for desired action.
4. Under ***Prefix & Suffix Options***– select letter(s) for desired options and add to model number.

EXAMPLES

D-121-X
Original Series, 1/2" stroke - 1 1/8" Bore - Single Rod, Double Acting

TD-121-X-MR
"T" Series, 3/8" Stroke - 1 1/8" Bore - Single Rod, Double Acting - Male Rod Thread

Suffix Options

Male rod thread: Single rod			**-MR**
Double rod, rod end			**-MR**
Double rod, cap end			**-MR1**
Double rod, both ends			**-MR2**
PTFE seals			**-T**
Viton seals			**-V**
Quad seals			**-Q**
External guide, nonrotating for load guiding (See page 1.65)			**-G**
Hydraulic: Standard cover			**-H**
Hole thru double rod shaft: 1/8" hole			**-13**
Plus size: 5/32" hole 150 psi max			**-16**
Finish: **ProCoat**™ (Electroless Nickel)			**-N**
Stroke collar:		1/8"	**-C1**
1/4"	**-C2**	3/8"	**-C3**
1/2"	**-C4**	5/8"	**-C5**
3/4"	**-C6**	7/8"	**-C7**
Sound limiters:	Rod end		**-LF**
	Cap end		**-LR**
	Both ends		**-LFR**
Rubber Bumpers:	Rod end		**-BF**
	Cap end		**-BR**
	Both ends		**-BFR**
Adjustable extend stroke (Full stroke adjustment is standard)			**-AS**
Adjustable retract stroke (Over 1" adjustment add desired length, e.g. -RS2)			**-RS**
Clevis mount:	Ports in-line with slot		**-PM**
	Ports 90° to slot		**-SM**
Eye mount:	Ports in-line with tang		**-EPM**
	Ports 90° to tang		**-ESM**
Threaded nose mount:	Single rod		**-F**
	Double rod, rod end		**-F**
	Double rod, cap end		**-F1**
	Double rod, both ends		**-F2**
Magnetic piston & sensor mounting slot(s) Order sensors separately. See page 1.14. Stroke length determines number of mounting slots. See page 1.14, 1.32, 1.34			**-E**

See pages 1.3 – 1.15 for general option information and pages 1.31, 1.32 & 1.34 for option specifications of 1 1/8" bore models.

A complete library of cylinder CAD drawings is available from your local Fabco-Air Distributor or from the Fabco-Air web site – http://www.fabco-air.com

Action –X
Double Acting

Note 1:
Strokes J, K, TJ, & TK have two #10-32 x .50 Tapped Mounting Holes on each end.

See page 1.16 for Mounting Bolts.
Push area = .99
Pull area = .80
Seal Kits for Series:
Original = 121-SK
"T" = 121-SKG

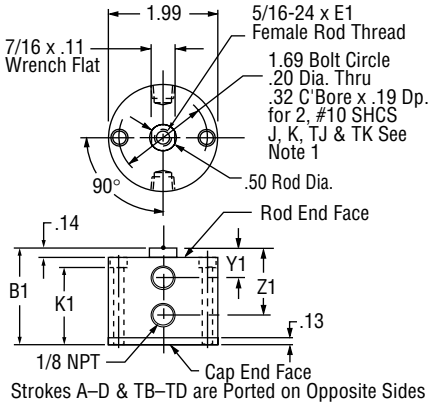

Strokes A–D & TB–TD are Ported on Opposite Sides

Action –XK
Double Acting
Nonrotating

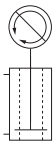

Note 1:
Strokes J, K, TJ, & TK have two #10-32 x .50 Tapped Mounting Holes on each end.

See page 1.16 for Mounting Bolts.
Push area = .97
Pull area = .78
Seal Kits for Series:
Original = 121-SK-K
"T" = 121-SKG-K

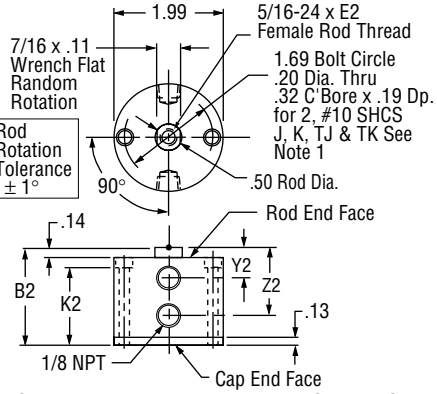

Strokes A–D & TB–TD are Ported on Opposite Sides

Original Series

Stroke, Inches	1/8	3/16	1/4	1/2	3/4	1	1 1/4	1 1/2	1 3/4	2	3	4
Stroke, Letter	A	B	C	D	X	E	F	G	H	I	J	K
Action –X Double Acting												
B1	1.02	1.02	1.02	1.33	1.77	2.02	2.27	2.52	2.95	3.39	3.99	4.99
E1	.38	.38	.38	.38	.63	.63	.63	.63	.63	.63	.63	.63
K1	.69	.69	.69	1.00	1.44	1.69	1.94	2.19	2.62	3.06	Note 1	Note 1
Y1	.45	.45	.45	.67	.52	.52	.52	.52	.70	.89	.52	.52
Z1	.45	.45	.45	.67	1.27	1.52	1.77	2.02	2.45	2.89	3.49	4.49
Weight, lb.	.28	.27	.26	.37	.48	.54	.61	.67	.81	.95	1.08	1.35
Action –XK Double Acting, Nonrotating												
B2	1.02	1.02	1.02	1.33	1.77	2.02	2.27	2.52	2.95	3.39	3.99	4.99
E2	.38	.38	.38	.38	.63	.63	.63	.63	.63	.63	.63	.63
K2	.69	.69	.69	1.00	1.44	1.69	1.94	2.19	2.62	3.06	Note 1	Note 1
Y2	.45	.45	.45	.67	.52	.52	.52	.52	.70	.89	.52	.52
Z2	.45	.45	.45	.67	1.27	1.52	1.77	2.02	2.45	2.89	3.49	4.49
Weight, lb.	.28	.27	.26	.37	.49	.55	.62	.68	.83	.97	1.10	1.38
Action –O Single Acting, Spring Retracted												
B3	1.02	1.02	1.02	1.33	2.02	2.27	2.95	3.39	3.99	3.99	NA*	NA*
E3	.38	.38	.38	.38	.63	.63	.63	.63	.63	.63	"	"
K3	.69	.69	.69	1.00	1.69	1.94	2.62	3.06	Note 1	Note 1	"	"
Y3	Rod End Face Vent				.52	.52	.70	.89	.52	.52	"	"
Z3	.45	.45	.45	.67	1.52	1.77	2.45	2.89	3.49	3.49	"	"
Weight,. lb.	.28	.28	.28	.34	.57	.63	.84	.98	1.15	1.15	"	"
Preload, lb.	6.0	5.0	4.0	3.8	4.4	3.7	5.0	4.6	2.5	2.8	"	"
End of Stroke, lb.	8.5	8.5	8.5	11.8	17.7	18.6	17.8	18.3	22.2	17.7	"	"
Action –OP Single Acting, Spring Extended												
B4	1.40	1.46	1.52	2.08	3.02	3.52	4.45	5.14	NA*	NA*	NA*	NA*
E4	.38	.38	.38	.38	.63	.63	.63	.63	"	"	"	"
K4	.94	.94	.94	1.25	1.94	2.19	2.87	3.31	"	"	"	"
Y4	.58	.64	.70	1.17	1.27	1.52	1.95	2.39	"	"	"	"
Z4	.58	.64	.70	1.17	2.27	2.77	3.70	4.39	"	"	"	"
Weight, lb.	.37	.36	.36	.43	.63	.70	.91	1.00	"	"	"	"
Preload, lb.	6.0	5.0	4.0	3.5	3.9	3.3	2.5	4.3	"	"	"	"
End of Stroke, lb.	8.5	8.5	8.5	11.5	17.1	18.2	16.8	18.1	"	"	"	"

"T" Series

Stroke, Inches	1/16	1/8	3/8	5/8	7/8	1 1/8	1 3/8	1 5/8	1 7/8	2 7/8	3 7/8
Stroke, Letter	TB	TC	TD	TX	TE	TF	TG	TH	TI	TJ	TK
Action –X Double Acting											
B1	1.02	1.02	1.33	1.77	2.02	2.27	2.52	2.95	3.39	3.99	4.99
E1	.38	.38	.38	.63	.63	.63	.63	.63	.63	.63	.63
K1	.69	.69	1.00	1.44	1.69	1.94	2.19	2.62	3.06	Note 1	Note 1
Y1	.45	.45	.67	.52	.52	.52	.52	.70	.89	.52	.52
Z1	.45	.45	.67	1.27	1.52	1.77	2.02	2.45	2.89	3.49	4.49
Weight, lb.	.28	.27	.38	.49	.55	.62	.68	.82	.96	1.09	1.36
Action –XK Double Acting, Nonrotating											
B2	1.02	1.02	1.33	1.77	2.02	2.27	2.52	2.95	3.39	3.99	4.99
E2	.38	.38	.38	.63	.63	.63	.63	.63	.63	.63	.63
K2	.69	.69	1.00	1.44	1.69	1.94	2.19	2.62	3.06	Note 1	Note 1
Y2	.45	.45	.67	.52	.52	.52	.52	.70	.89	.52	.52
Z2	.45	.45	.67	1.27	1.52	1.77	2.02	2.45	2.89	3.49	4.49
Weight, lb.	.28	.27	.38	.50	.56	.63	.69	.84	.98	1.11	1.39
Action –O Single Acting, Spring Retracted											
B3	1.02	1.02	1.33	2.02	2.27	2.95	3.39	3.99	3.99	NA*	NA*
E3	.38	.38	.38	.63	.63	.63	.63	.63	.63	"	"
K3	.69	.69	1.00	1.69	1.94	2.62	3.06	Note 1	Note 1	"	"
Y3	Rod End Face Vent			.52	.52	.70	.89	.52	.52	"	"
Z3	.45	.45	.67	1.52	1.77	2.45	2.89	3.49	3.49	"	"
Weight,. lb.	.29	.29	.35	.58	.65	.85	.99	1.16	1.16	"	"
Preload, lb.	5.0	4.0	3.8	4.4	3.7	5.0	4.6	2.5	2.8	"	"
End of Stroke, lb.	8.5	8.5	11.8	17.7	18.6	17.8	18.3	22.2	17.7	"	"
Action –OP Single Acting, Spring Extended											
B4	1.33	1.40	1.96	2.90	3.40	4.33	5.02	NA*	NA*	NA*	NA*
E4	.38	.38	.38	.63	.63	.63	.63	"	"	"	"
K4	.94	.94	1.25	1.94	2.19	2.87	3.31	"	"	"	"
Y4	.51	.58	1.05	1.15	1.40	1.83	2.27	"	"	"	"
Z4	.51	.58	1.05	2.15	2.65	3.58	4.27	"	"	"	"
Weight, lb.	.37	.37	.44	.65	.72	.92	1.10	"	"	"	"
Preload, lb.	5.0	4.0	3.5	6.1	5.1	4.0	5.5	"	"	"	"
End of Stroke, lb.	8.5	8.5	8.5	17.1	18.2	16.8	18.1	"	"	"	"

N/A* = Not Available

Action –O
Single Acting
Spring Retracted

Note 1:
Strokes H, I, TH & TI have two #10-32 x .50 Tapped Mounting Holes on each end.
See page 1.16 for Mounting Bolts.
Push area = .99
See chart for Spring Forces: Preload and End of Stroke.
Seal Kits for Series:
Original = 121-SK
"T" = 121-SKG

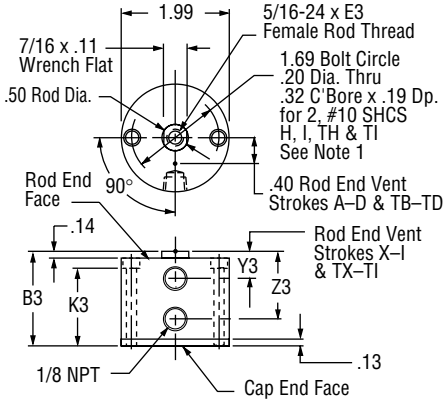

Action –OP
Single Acting
Spring Extended

See page 1.16 for Mounting Bolts.
Pull area = .80
See Chart for Spring Forces: Preload & End of Stroke
Seal Kits for Series:
Original = 121-SK
"T" = 121-SKG

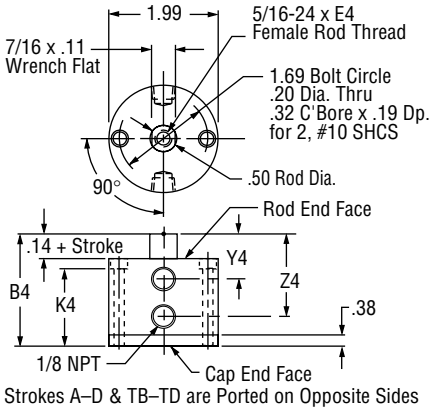

Strokes A–D & TB–TD are Ported on Opposite Sides

NA* = Not Available

Prefix Option -M Metric Cylinder & Rod Thread, 28.5mm Bore

Available on Original and "T" Series with Actions: -X, -XK, -O, -OP
Also see *Option Information* on page 1.7.

Original Series												
Stroke mm	3.2	4.8	6.4	12.7	19.1	25.4	31.8	38.1	44.5	50.8	76.2	101.6
Stroke Letter	A	B	C	D	X	E	F	G	H	I	J	K

"T" Series											
Stroke mm	1.6	3.2	9.5	15.9	22.2	28.6	34.9	41.3	47.6	73.0	96.4
Stroke Letter	TB	TC	TD	TX	TE	TF	TG	TH	TI	TJ	TK

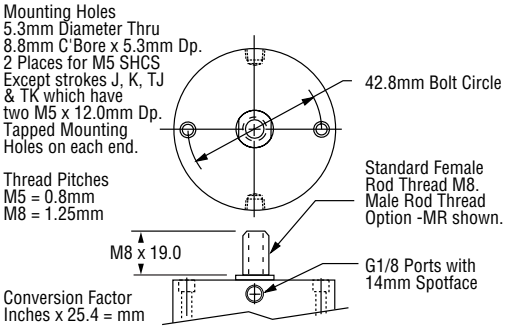

The **Suffix Options** charted on the right are available on Original and "T" Series with the Actions indicated (✓). They require no dimensional changes from the Standard Specifications on page 1.30.
– Also see Option Information on pages 1.7 thru 1.15.

	T	V	Q	H	N	C1–C7	LF	LR	LFR	BF	BR	BFR
-X	✓	✓	✓	✓	✓	✓	✓	✓	✓	✓	✓	✓
-XK	NA	✓	✓	NA	✓	✓	NA	✓	NA	✓	✓	✓
-O	NA	✓	✓	✓	✓	NA	NA	✓	NA	NA	✓	NA
-OP	NA	✓	✓	✓	✓	✓	✓	✓	✓	✓	NA	NA

Suffix Options -PM & -SM Clevis Mount

Available on Original and "T" Series
with Actions: -X, -XK, -O, -OP
Also see *Option Information* on page 1.13.

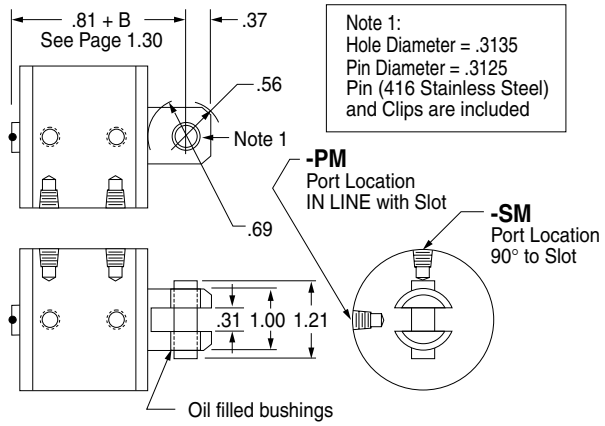

Suffix Options -EPM & -ESM Eye Mount

Available on Original and "T" Series
with Actions: -X, -XK, -O, -OP
Also see *Option Information* on page 1.13.

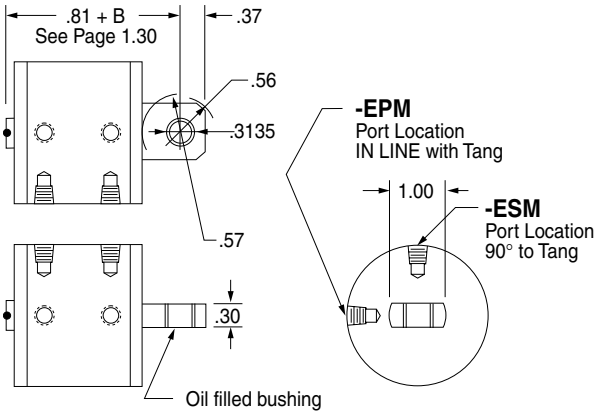

EM-121 Eye Bracket Kit

Mates with Clevis Mount above.
Order separately.

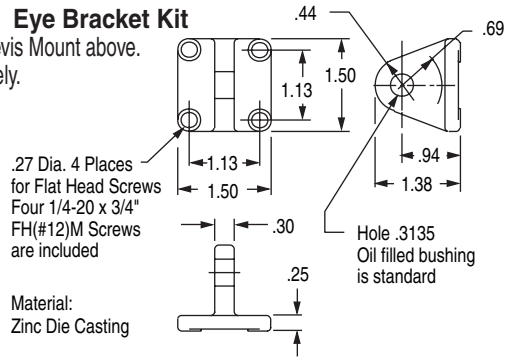

PM-121 Clevis Bracket Kit

Mates with Eye Mount above.
Order separately.

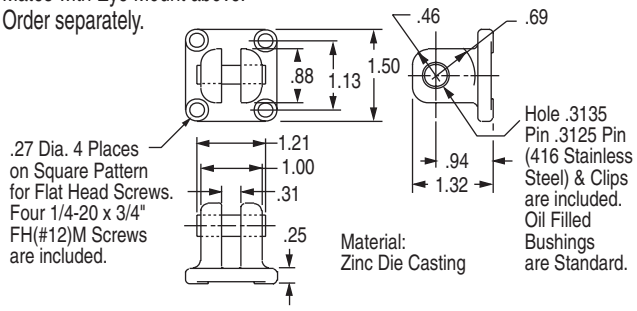

RC-31 Rod Clevis and Pin

Threaded Stud mates with
Female Rod thread
in ***Pancake®*** Cylinders.
Slot & Pin Mate with
EM-04 Eye Bracket
shown on the right.

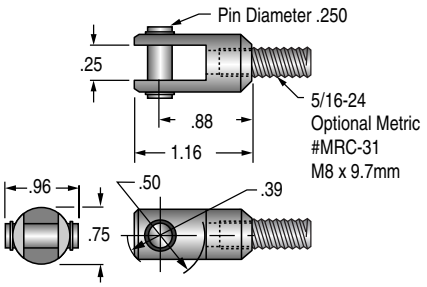

Materials:
Clevis – Steel, Black Oxide
Stud – Steel
Pin – 416 Stainless Steel
Pin & Clips are included

EM-04 Eye Bracket Kit

Mates RC-31
Rod Clevis shown
on the left.

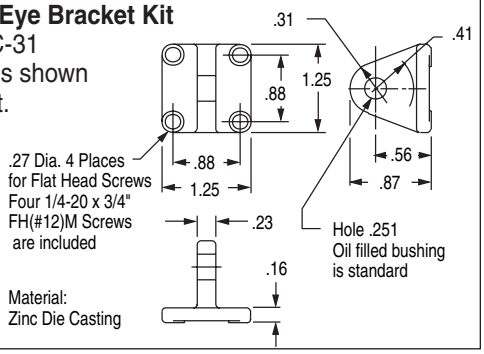

Suffix Option -MR Male Rod Thread

Available on Original and "T" Series with Actions: -X, -XK, -O, -OP. Also see *Option Information* on page 1.8.

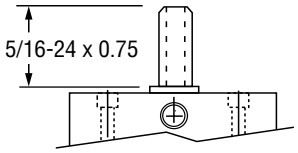

Suffix Option -RS Adjustable Retract Stroke

Available on Original and "T" Series with Actions: -X, -XK, -O, -OP
Also see *Option Information* on page 1.11.

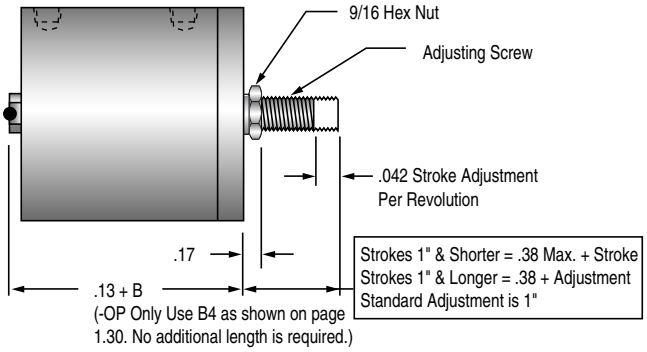

Suffix Option -F Threaded Nose Mount

Available on Original and "T" Series with Actions: -X, -XK, -O, -OP
Also see *Option Information* on page 1.13.

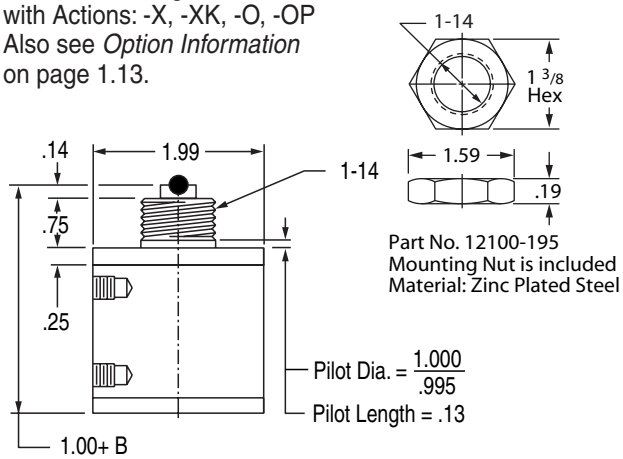

Suffix Option -E *Specifies Magnetic Piston and Dovetail Mounting Slot(s)*

Strokes are NOT affected by magnetic piston.

– Sensors Must be Ordered Separately See Sensor Models Available page 1.14

1 1/8" (121) Bore

Note: ***Alloy steel mounting bolts may effect sensing. Stainless steel or other non-magnetic bolts are recommended.***

Sensors available for "D" & "TD" strokes and longer. Strokes "D" & "TD" are ported on opposite sides.

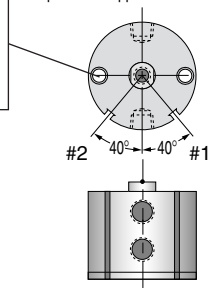

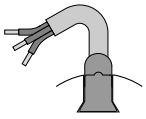

1/4" 60° Dovetail Profile of Sensor & Mounting Slot.

Quick Reference to Standard Strokes
Use the appropriate Stroke Letter in the Model Number

	Available on Original Series			Available on "T" Series		
	Stroke	Action X	Action XK	Stroke	Action X	Action XK
Sensor Slots at Positions #1 and # 2	1/2	D	Not Available	3/8	TD	Not Available
	3/4	X	X	5/8	TX	TX
	1	E	E	7/8	TE	TE
	1 1/4	F	F	1 1/8	TF	TF
Sensor Slot at Position #1 only	1 1/2	G	G	1 3/8	TG	TG
	1 3/4	H	H	1 5/8	TH	TH
	2	I	I	1 7/8	TI	TI
	3	J	J	2 7/8	TJ	TJ
	4	K	K	3 7/8	TK	TK

Suffix Option -AS Adjustable Extend Stroke

Available on Original Series with Actions: -X, -XK, -O
Also see *Option Information* on page 1.11.

Stroke Inches		1/8	3/16	1/4	1/2	3/4	1	1-1/4	1-1/2	1-3/4	2	3	4
Stroke Letter		A	B	C	D	X	E	F	G	H	I	J	K
Actions: -X, -XK	BB	1.36	1.36	1.36	1.67	2.11	2.36	2.61	2.86	3.30	3.74	4.33	5.33
Actions:-O	BB	1.36	1.36	1.36	1.67	2.36	2.61	3.30	3.74	4.33	4.33	NA	NA
	C	1.40	1.53	1.66	2.16	2.66	3.16	3.66	4.16	4.66	5.16	7.16	9.16
	D	0.63	0.69	0.75	1.00	1.25	1.50	1.75	2.00	2.25	2.50	3.50	4.50
	E	0.63	0.69	0.75	1.00	1.25	1.50	1.75	2.00	2.25	2.50	3.50	4.50

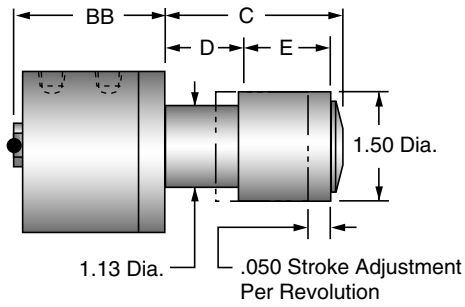

1

Action –XDR Original Series
Double Rod, Double Acting

Note 1:
Strokes J & K have two #10-32 x .50 Tapped Mounting Holes on each end.

See page 1.16 for Mounting Bolts
Force Area = .80
Seal Kit = 121-SK

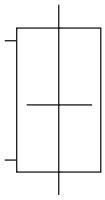

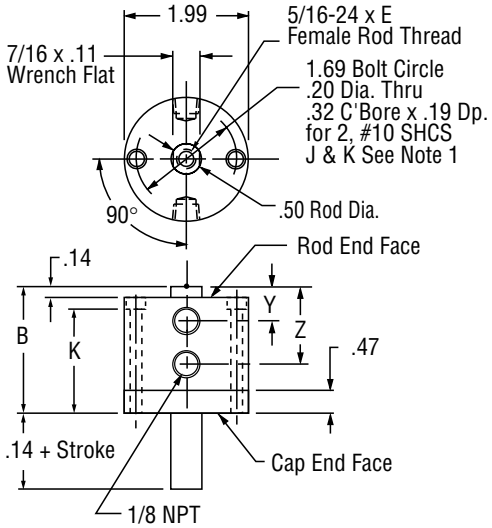

Strokes A – D are Ported on Opposite Sides

Stroke, Inches	1/8	3/16	1/4	1/2	3/4	1	1 1/4	1 1/2	1 3/4	2	3	4
Stroke, Letter	A	B	C	D	X	E	F	G	H	I	J	K
B	1.36	1.36	1.36	1.67	2.11	2.36	2.61	2.86	3.30	3.74	4.33	5.33
E	.38	.38	.38	.34	.63	.63	.63	.63	.63	.63	.63	.63
K	1.04	1.04	1.04	1.34	1.78	2.03	2.28	2.53	2.96	3.40	Note 1	Note 1
Y	.45	.45	.45	.67	.52	.52	.52	.52	.70	.89	.52	.52
Z	.45	.45	.45	.67	1.27	1.52	1.77	2.02	2.45	2.89	3.49	4.49
Weight, lb.	.46	.45	.44	.55	.68	.76	.83	.91	1.07	1.22	1.41	1.71

Action –XDRK Original Series
Double Rod, Double Acting, Nonrotating

Note 1:
Strokes J & K have two #10-32 x .50 Tapped Mounting Holes on each end.

See page 1.16 for Mounting Bolts
Force Area = .78
Seal Kit = 121-SK-K

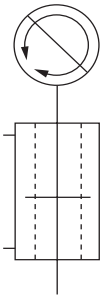

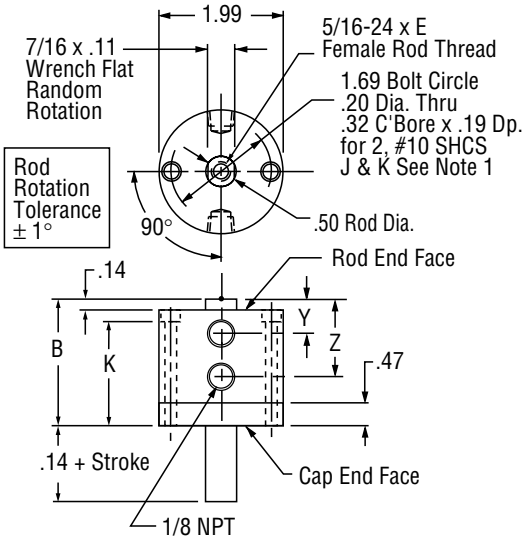

Strokes A – D are Ported on Opposite Sides

Stroke, Inches	1/8	3/16	1/4	1/2	3/4	1	1 1/4	1 1/2	1 3/4	2	3	4
Stroke, Letter	A	B	C	D	X	E	F	G	H	I	J	K
B	1.36	1.36	1.36	1.67	2.11	2.36	2.61	2.86	3.30	3.74	4.33	5.33
E	.38	.38	.38	.34	.63	.63	.63	.63	.63	.63	.63	.63
K	1.04	1.04	1.04	1.34	1.78	2.03	2.28	2.53	2.96	3.40	Note 1	Note 1
Y	.45	.45	.45	.67	.52	.52	.52	.52	.70	.89	.52	.52
Z	.45	.45	.45	.67	1.27	1.52	1.77	2.02	2.45	2.89	3.49	4.49
Weight, lb.	.47	.46	.45	.56	.69	.77	.84	.93	1.09	1.24	1.43	1.74

Action –ODR Original Series
Double Rod, Single Acting, Spring Retracted

Note 1:
Strokes H & I have two #10-32 x .50 Tapped Mounting Holes on each end.

See page 1.16 for Mounting Bolts
Force Area = .80
Seal Kit = 121-SK

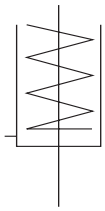

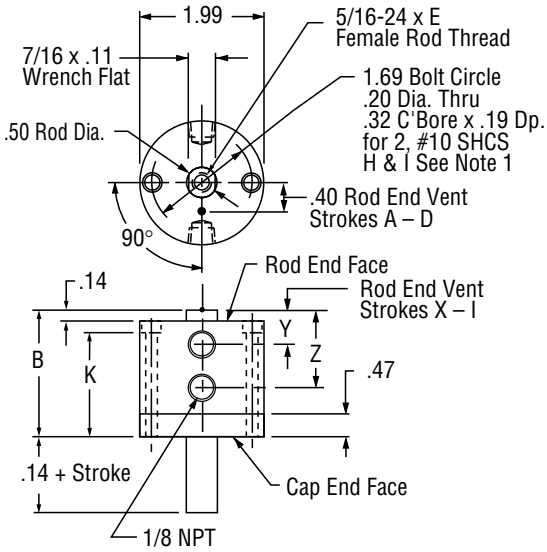

Stroke, Inches	1/8	3/16	1/4	1/2	3/4	1	1 1/4	1 1/2	1 3/4	2
Stroke, Letter	A	B	C	D	X	E	F	G	H	I
B	1.36	1.36	1.36	1.67	2.36	2.61	3.30	3.74	4.33	4.33
E	.38	.38	.38	.34	.63	.63	.63	.63	.63	.63
K	1.04	1.04	1.04	1.34	2.03	2.28	2.96	3.40	Note 1	Note 1
Y	Rod End Vent Face				.52	.52	.70	.89	.52	.52
Z	.45	.45	.45	.67	1.52	1.77	2.45	2.89	3.49	3.49
Weight, lb.	.44	.44	.43	.53	.76	.83	1.07	1.22	1.41	1.41
Spring Return Forces, lb.										
Preload	6.0	5.0	4.0	3.5	4.4	3.7	2.8	4.6	2.8	2.8
End of Stroke	8.5	8.5	8.5	11.5	17.7	18.6	17.1	18.3	15.8	17.7

Prefix Option -M Metric Cylinder & Rod Thread, 50.8mm Bore
Available on Original Series with Actions: -XDR, -XDRK, -ODR
Also see *Option Information* on page 1.7.

Stroke mm	3.2	4.8	6.4	12.7	19.1	25.4	31.8	38.1	44.5	50.8	76.2	101.6
Stroke Letter	A	B	C	D	X	E	F	G	H	I	J	K

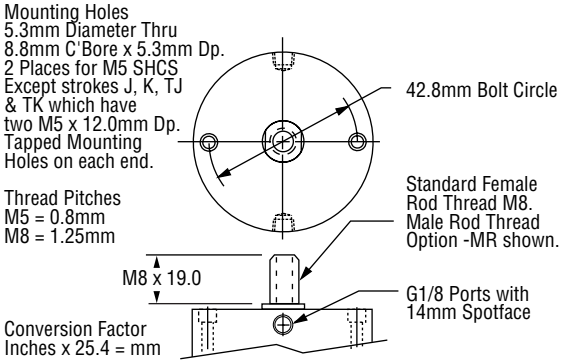

The **Suffix Options** charted on the right are available on Original Series with the Actions indicated (✓). They require no dimensional changes from the Standard Specifications on page 1.33. – *Also see Option Information on pages 1.7 thru 1.15.*

	T	V	Q	H	N	C1–C7	LF	LR	LFR	BF	BR	BFR	13	16
-XDR	✓	✓	✓	✓	✓	✓	✓	✓	✓	✓	✓	✓	✓	✓
-XDRK	NA	✓	✓	NA	✓	✓	NA	NA	NA	✓	✓	✓	✓	✓
-ODR	NA	✓	✓	✓	✓	NA	NA	✓	NA	NA	✓	NA	✓	✓

Suffix Options -MR, -MR1, -MR2 Male Rod Thread

Available on Original Series with Actions -XDR, -XDRK, -ODR.

For Rod End only use –MR
For Cap End only use –MR1
For Both Ends use –MR2

Also see Option Information on Page 1.8.

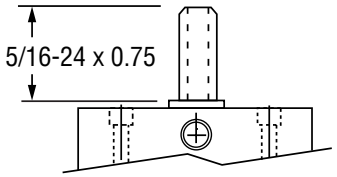

Suffix Options -F, -F1, -F2 Threaded Nose Mount
Available on Original Series
with Actions -XDR, -XDRK, -ODR.
For Rod End only use **-F**
For Cap End only use **-F1**
For Both Ends use **-F2**

Also see Option Information page 1.13.

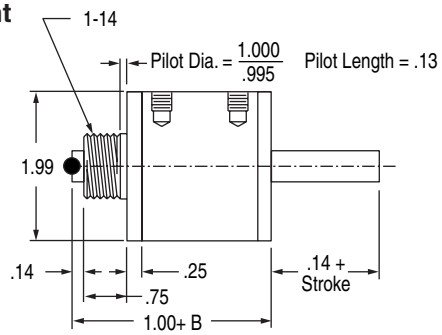

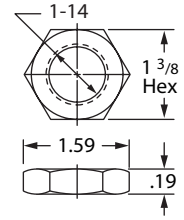

Part No. 12100-195
Mounting Nut is included
Material: Zinc Plated Steel

Suffix Option -E ***Specifies Magnetic Piston and Dovetail Mounting Slot(s)***
Strokes are NOT affected by magnetic piston.

–Sensors Must Be Ordered Separately
See Sensor Models Available page 1.14

1 1/8" (121) Bore

Note:
Alloy steel mounting bolts may effect sensing. Stainless steel or other non-magnetic bolts are recommended.

Sensors available for "D" strokes and longer. Stroke D is ported on opposite sides.

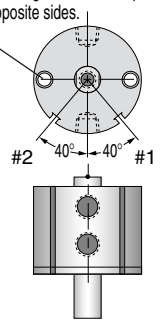

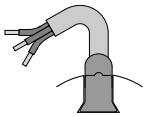

1/4" 60° Dovetail Profile of Sensor & Mounting Slot.

Quick Reference to Standard Strokes
Use the appropriate Stroke Letter in the Model Number

Available on Original Series

	Stroke	Action XDR	Action XDRK
Sensor Slots at Positions #1 and # 2	1/2	D	Not Available
	3/4	X	X
	1	E	E
	1 1/4	F	F
Sensor Slot at Position #1 only	1 1/2	G	G
	1 3/4	H	H
	2	I	I
	3	J	J
	4	K	K

1

Model Number Code

Prefix Options	Stroke		Bore		Action		Suffix Options
Leave blank if none desired	D	–	221	–	X	–	MR

Metric	M
See pages 1.7, 1.37 & 1.40	

Bore	Code
1 5/8"	221
41.3mm	221

Standard Strokes

Original Series

Action	X XK XDR XDRK	O ODR	OP
Stroke			
1/8	AA	AA	AA
1/4	A*	A	A
1/2	B	B	B
3/4	C	C	C
1	D	D	D
1 1/2	E	E	–
2	F	–	–
3	G	–	–
4	H	–	–

"T" Series Includes PTFE piston bearing

Action	X XK	O	OP
Stroke			
1/4	TB	TB	TB
1/2	TC	TC	TC
3/4	TD	TD	TD
1 1/4	TE	TE	–
1 3/4	TF	–	–
2 3/4	TG	–	–
3 3/4	TH	–	–

Grey shading indicates sensors are not available.

Strokes are NOT affected by magnetic piston Option "E"

***Note –**
Sensors not available:
A-221-XK
A-221-XDRK

Action

Single rod

Double acting	**-X**
Double acting, Nonrotating Internal guide pins - 150 psi max	**-XK**
Single acting, spring retracted	**-O**
Single acting, spring extended	**-OP**

Double rod

Double acting	**-XDR**
Double acting, Nonrotating Internal guide pins - 150 psi max	**-XDRK**
Single acting, spring retracted	**-ODR**

See pages 1.5 & 1.6 for Action Information.
See pages 1.36 & 1.39 for Standard Specifications

HOW TO ORDER

1. Under ***Stroke*** – select letter(s) for desired Series and Stroke.
2. Under ***Bore*** – select **221** for 1 5/8" bore.
   Seven Other Bore Sizes are Available

Bore	Bore Code	See page
1/2"	5	1.17
3/4"	7	1.23
1 1/8"	121	1.29
2"	321	1.41
2 1/2"	521	1.47
3"	721	1.53
4"	1221	1.59

3. Under ***Action*** – select letter(s) for desired action.
4. Under ***Prefix & Suffix Options***– select letter(s) for desired options and add to model number.

EXAMPLES

B-221-X
Original Series, 1/2" stroke - 1 5/8" Bore - Single Rod, Double Acting

TC-221-O-MR
"T" Series, 1/2" Stroke - 1 5/8" Bore - Single Rod, Spring Retract - Male Rod Thread

Suffix Options

Male rod thread: Single rod		**-MR**
Double rod, rod end		**-MR**
Double rod, cap end		**-MR1**
Double rod, both ends		**-MR2**
PTFE seals		**-T**
Viton seals		**-V**
Quad seals		**-Q**
External guide, nonrotating for load guiding (See page 1.65)		**-G**
Hydraulic: Standard cover		**-H**
Thick cover		**-HHC**
Air service: Thick cover		**-HC**
1/4 NPT ports		**-P14**
Hole thru double rod shaft: 1/8" hole		**-13**
Plus size: 1/4" hole 150 psi max		**-25**
Finish: **ProCoat™** (Electroless Nickel)		**-N**
Stroke collar: 1/4"	**-C2**	**-C1** 1/8"
1/2"	**-C4**	**-C3** 3/8"
3/4"	**-C6**	**-C5** 5/8"
		-C7 7/8"
Sound limiters: Rod end		**-LF**
Cap end		**-LR**
Both ends		**-LFR**
Rubber Bumpers: Rod end		**-BF**
Cap end		**-BR**
Both ends		**-BFR**
Adjustable extend stroke (Full stroke adjustment is standard)		**-AS**
Adjustable retract stroke (Over 1" adjustment add desired length, e.g. -RS2)		**-RS**
Clevis mount: Ports in-line with slot		**-PM**
Ports 90° to slot		**-SM**
Eye mount: Ports in-line with tang		**-EPM**
Ports 90° to tang		**-ESM**
Threaded nose mount: Single rod		**-F**
Double rod, rod end		**-F**
Double rod, cap end		**-F1**
Double rod, both ends		**-F2**
Magnetic piston & sensor mounting slot(s) Order sensors separately. See page 1.14. Stroke length determines number of mounting slots. See page 1.14, 1.38, 1.40		**-E**

See pages 1.3 – 1.15 for general option information. and pages 1.37, 1.38 & 1.40 for option specifications of 1 5/8" bore models.

A complete library of cylinder CAD drawings is available from your local Fabco-Air Distributor or from the Fabco-Air web site – http://www.fabco-air.com

Action –X
Double Acting

See page 1.16 for Mounting Bolts.
Push area = 2.07
Pull area = 1.76
Seal Kits for Series:
Original = 221-SK
"T" = 221-SKG

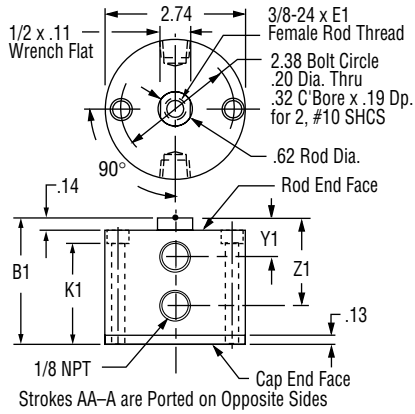

Strokes AA–A are Ported on Opposite Sides

Action –XK
Double Acting
Nonrotating

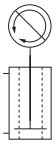

See page 1.16 for Mounting Bolts.
Push area = 2.01
Pull area = 1.70
Seal Kits for Series:
Original = 221-SK-K
"T" = 221-SKG-K

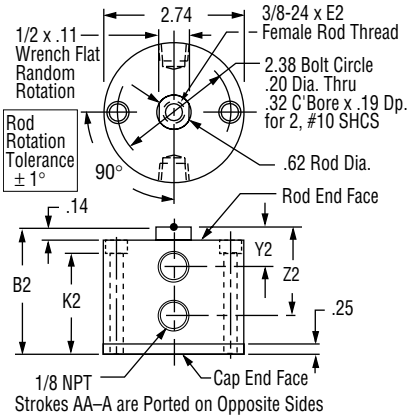

Strokes AA–A are Ported on Opposite Sides

Original Series / "T" Series

Stroke, Inches	1/8	1/4	1/2	3/4	1	1 1/2	2	3	4	1/4	1/2	3/4	1 1/4	1 3/4	2 3/4	3 3/4
Stroke, Letter	AA	A	B	C	D	E	F	G	H	TB	TC	TD	TE	TF	TG	TH
Action –X Double Acting										**Action –X Double Acting**						
B1	1.14	1.27	1.77	2.02	2.33	2.83	3.33	4.33	5.33	1.77	2.02	2.33	2.83	3.33	4.33	5.33
E1	.38	.44	.63	.63	.75	.75	.75	.75	.75	.63	.63	.75	.75	.75	.75	.75
K1	.81	.94	1.44	1.69	2.00	2.50	3.00	4.00	5.00	1.44	1.69	2.00	2.50	3.00	4.00	5.00
Y1	.64	.64	.52	.52	.52	.52	.52	.52	.52	.52	.52	.52	.52	.52	.52	.52
Z1	.64	.64	1.27	1.52	1.83	2.33	2.83	3.83	4.83	1.27	1.57	1.83	2.33	2.83	3.83	4.83
Weight, lb.	.60	.64	.93	1.06	1.19	1.43	1.66	2.14	2.60	.99	1.12	1.25	1.49	1.72	2.20	2.66
Action –XK Double Acting, Nonrotating										**Action –XK Double Acting, Nonrotating**						
B2	1.27	1.40	1.90	2.15	2.46	2.96	3.46	4.46	5.46	1.90	2.15	2.46	2.96	3.46	4.46	5.46
E2	.38	.44	.63	.63	.75	.75	.75	.75	.75	.63	.63	.75	.75	.75	.75	.75
K2	.94	1.06	1.57	1.82	2.13	2.63	3.13	4.13	5.13	1.57	1.82	2.13	2.63	3.13	4.13	5.13
Y2	.64	.64	.52	.52	.52	.52	.52	.52	.52	.52	.52	.52	.52	.52	.52	.52
Z2	.64	.64	1.27	1.52	1.83	2.33	2.83	3.83	4.83	1.27	1.57	1.83	2.33	2.83	3.83	4.83
Weight, lb.	.68	.72	1.02	1.15	1.29	1.53	1.77	2.27	2.74	1.08	1.21	1.35	1.59	1.83	2.83	3.80
Action –O Single Acting, Spring Retracted										**Action –O Single Acting, Spring Retracted**						
B3	1.14	1.27	1.77	2.02	2.33	4.33	NA*	NA*	NA*	1.77	2.02	2.33	4.33	NA*	NA*	NA*
E3	.38	.44	.63	.63	.75	.75	NA*	NA*	NA*	.63	.63	.75	.75	NA*	NA*	NA*
K3	.81	.94	1.44	1.69	2.00	4.00	NA*	NA*	NA*	1.44	1.69	2.00	4.00	NA*	NA*	NA*
Y3	Rod End Face Vent					.52	NA*	NA*	NA*	Rod End Face Vent			.52	NA*	NA*	NA*
Z3	.64	.77	1.27	1.52	1.83	3.83	NA*	NA*	NA*	1.27	1.57	1.83	3.83	NA*	NA*	NA*
Weight,. lb.	.58	.63	.89	1.00	1.15	2.10	NA*	NA*	NA*	.95	1.06	1.21	2.16	NA*	NA*	NA*
Preload, lb.	15.0	8.5	8.5	6.0	4.8	6.0	NA*	NA*	NA*	8.5	8.5	6.0	7.06	NA*	NA*	NA*
End of Stroke, lb.	20.0	20.0	20.0	18.0	20.0	18.0	NA*	NA*	NA*	20.0	20.0	18.0	20.0	NA*	NA*	NA*
Action –OP Single Acting, Spring Extended										**Action –OP Single Acting, Spring Extended**						
B4	1.65	1.89	2.64	3.14	3.83	NA*	NA*	NA*	NA*	2.39	2.89	3.58	NA*	NA*	NA*	NA*
E4	.38	.44	.63	.63	.75	NA*	NA*	NA*	NA*	.63	.63	.75	NA*	NA*	NA*	NA*
K4	1.19	1.32	1.82	2.07	2.50	NA*	NA*	NA*	NA*	1.82	2.07	2.50	NA*	NA*	NA*	NA*
Y4	.77	.89	1.02	1.27	1.52	NA*	NA*	NA*	NA*	.77	1.02	1.27	NA*	NA*	NA*	NA*
Z4	.77	.89	1.77	2.27	2.83	NA*	NA*	NA*	NA*	1.52	2.07	2.58	NA*	NA*	NA*	NA*
Weight, lb.	.81	.83	1.10	1.20	1.42	NA*	NA*	NA*	NA*	1.16	1.26	1.48	NA*	NA*	NA*	NA*
Preload, lb.	8.5	4.5	5.5	4.0	4.8	NA*	NA*	NA*	NA*	4.5	5.5	4.0	NA*	NA*	NA*	NA*
End of Stroke, lb.	15.0	15.0	18.5	17.5	20.0	NA*	NA*	NA*	NA*	15.0	18.5	17.5	NA*	NA*	NA*	NA*

Action –O
Single Acting
Spring Retracted

See page 1.16 for Mounting Bolts.
Push area = 2.07
See Chart for Spring Forces: Preload & End of Stroke
Seal Kits for Series:
Original = 221-SK
"T" = 221-SKG

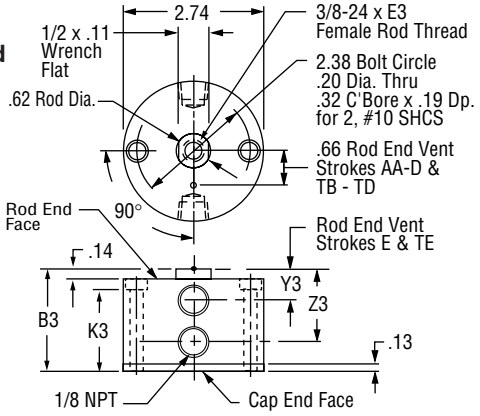

Action –OP
Single Acting
Spring Extended

See page 1.16 for Mounting Bolts.
Pull area = 1.76
See Chart for Spring Forces: Preload & End of Stroke
Seal Kits for Series:
Original = 221-SK
"T" = 221-SKG

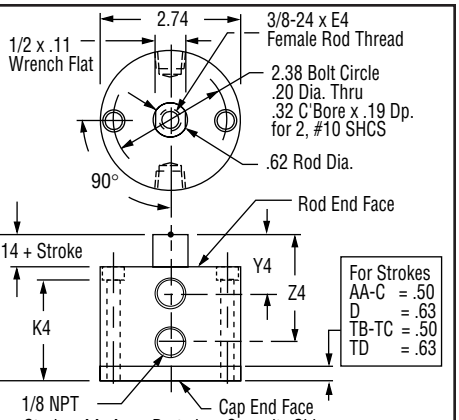

Strokes AA–A are Ported on Opposite Sides

NA* = Not Available

Prefix Option -M Metric Cylinder & Rod Thread, 41.3mm Bore

Available on Original and "T" Series with Actions: -X, -XK, -O, -OP
Also see *Option Information* on page 1.7.

Original Series									
Stroke mm	3.2	6.4	12.7	19.1	25.4	38.1	50.8	76.2	101.6
Stroke Letter	AA	A	B	C	D	E	F	G	H

"T" Series							
Stroke mm	6.4	12.7	19.1	31.8	44.5	69.9	95.3
Stroke Letter	TB	TC	TD	TE	TF	TG	TH

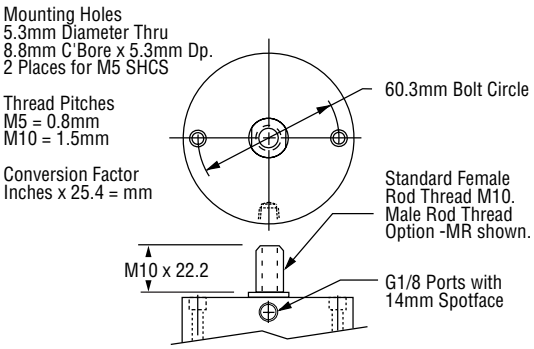

The **Suffix Options** charted on the right are available on Original and "T" Series with the Actions indicated (✓). They require no dimensional changes from the Standard Specifications on page 1.36.
– Also see Option Information on pages 1.7 thru 1.15.

	T	V	Q	H	N	C1–C7	LF	LR	LFR	BF	BR	BFR	P14
-X	✓	✓	✓	✓	✓	✓	✓	✓	✓	✓	✓	✓	✓
-XK	NA	✓	✓	NA	✓	✓	NA	✓	NA	✓	✓	✓	✓
-O	NA	✓	✓	✓	✓	NA	NA	✓	NA	NA	✓	NA	✓
-OP	NA	✓	✓	✓	✓	✓	✓	✓	✓	✓	NA	NA	✓

Suffix Options -PM & -SM Clevis Mount

Available on Original and "T" Series
with Actions: -X, -XK, -O, -OP
Also see *Option Information* on page 1.13.

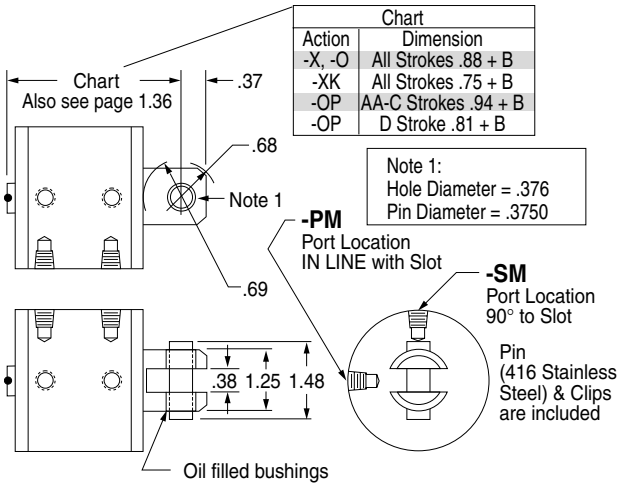

Chart	
Action	Dimension
-X, -O	All Strokes .88 + B
-XK	All Strokes .75 + B
-OP	AA-C Strokes .94 + B
-OP	D Stroke .81 + B

Note 1:
Hole Diameter = .376
Pin Diameter = .3750

Suffix Options -EPM & -ESM Eye Mount

Available on Original and "T" Series
with Actions: -X, -XK, -O, -OP
Also see *Option Information* on page 1.13.

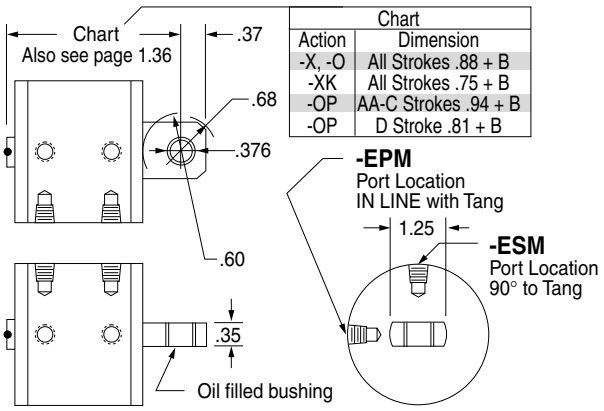

Chart	
Action	Dimension
-X, -O	All Strokes .88 + B
-XK	All Strokes .75 + B
-OP	AA-C Strokes .94 + B
-OP	D Stroke .81 + B

EM-221 Eye Bracket Kit

Mates with Clevis Mount shown above.
Order separately.

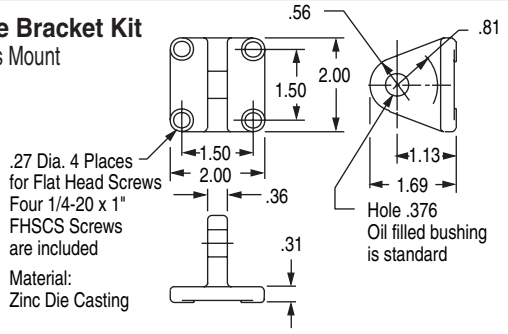

PM-221 Clevis Bracket Kit

Mates with Eye Mount shown above.
Order separately.

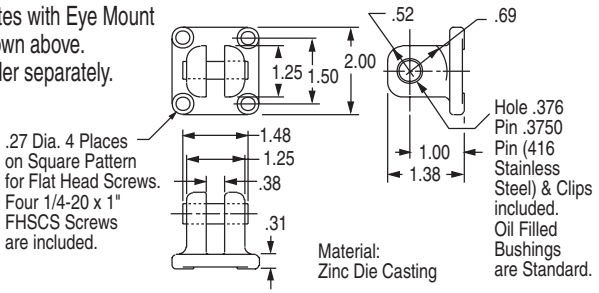

RC-38 Rod Clevis and Pin

Threaded Stud mates with Female Rod thread in ***Pancake®*** Cylinders. Slot & Pin Mate with EM-121 Eye Bracket shown on the right.

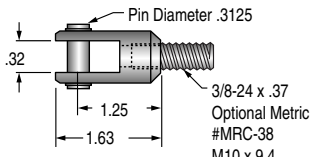

Materials:
Clevis – Steel, Black Oxide
Stud – Steel
Pin – 416 Stainless Steel
Pin & Clips are included

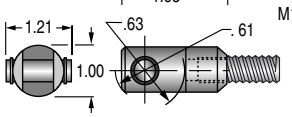

EM-121 Eye Bracket Kit

Mates RC-38 Rod Clevis shown on the left.

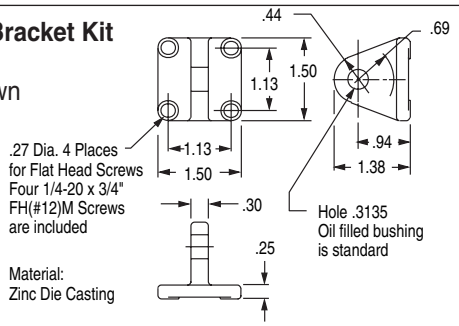

Suffix Options -HHC Hydraulic & -HC Air

Available on Original and "T" Series with Action -X, -O.

Also see *Option Information* on page 1.9 for Pressure and Mounting details.

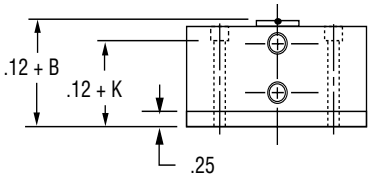

Suffix Option -MR Male Rod Thread

Available on Original and "T" Series with Actions: -X, -XK, -O, -OP. Also see *Option Information* on page 1.8.

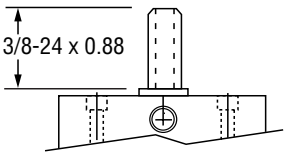

Suffix Option -RS Adjustable Retract Stroke

Available on Original and "T" Series with Actions: -X, -XK, -O, -OP
Also see *Option Information* on page 1.11.

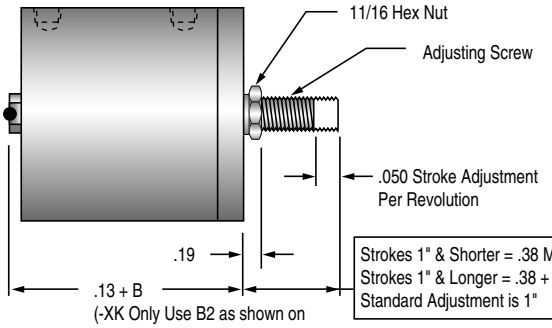

Strokes 1" & Shorter = .38 Max. + Stroke
Strokes 1" & Longer = .38 + Adjustment
Standard Adjustment is 1"

(-XK Only Use B2 as shown on page 1.36. No additional length is required.)
(-OP Only Use B4 as shown on page 1.36. No additional length is required.)

Suffix Option -F Threaded Nose Mount

Available on Original and "T" Series with Actions: -X, -XK, -O, -OP
Also see *Option Information* on page 1.13.

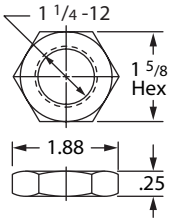

Part No. 22100-195
Mounting Nut is included
Material: Zinc Plated Steel

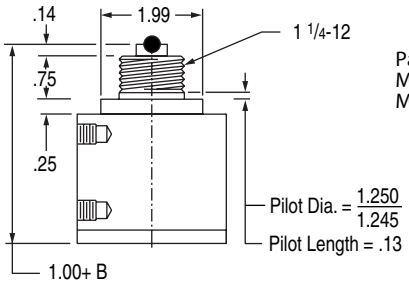

Suffix Option -E *Specifies Magnetic Piston and Dovetail Mounting Slot(s)*

– Sensors Must be Ordered Separately See Sensor Models Available page 1.14

1 5/8" (221) Bore

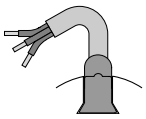

1/4" 60° Dovetail Profile of Sensor & Mounting Slot.

Sensors available for "A" & "TB" strokes and longer. Stroke A is ported on opposite sides.

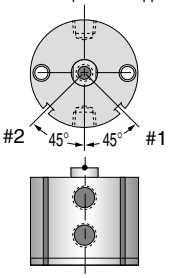

Quick Reference to Standard Strokes
Use the appropriate Stroke Letter in the Model Number

	Available on Original Series			*Available on "T" Series*	
	Stroke	Action X	Action XK	Stroke	Action X, XK
Sensor Slots at Positions #1 and # 2	1/4	A	Not Available	1/4	TB
	1/2	B	B	1/2	TC
	3/4	C	C	3/4	TD
	1	D	D		
Sensor Slot at Position #1 only	1 1/2	E	E	1 1/4	TE
	2	F	F	1 3/4	TF
	3	G	G	2 3/4	TG
	4	H	H	3 3/4	TH

Suffix Option -AS Adjustable Extend Stroke

Available on Original Series with Actions: -X, -XK, -O
Also see *Option Information* on page 1.11.

Stroke Inches		1/8	1/4	1/2	3/4	1	1-1/2	2	3	4
Stroke Letter		AA	A	B	C	D	E	F	G	H
Actions: -X, -XK	BB	1.61	1.74	2.24	2.49	2.80	3.30	3.80	4.80	5.80
Actions:-O	BB	1.61	1.74	2.24	2.49	2.80	4.80	NA	NA	NA
	C	1.40	1.66	2.16	2.66	3.16	4.16	5.16	7.16	9.16
	D	0.63	0.75	1.00	1.25	1.50	2.00	2.50	3.50	4.50
	E	0.63	0.75	1.00	1.25	1.50	2.00	2.50	3.50	4.50

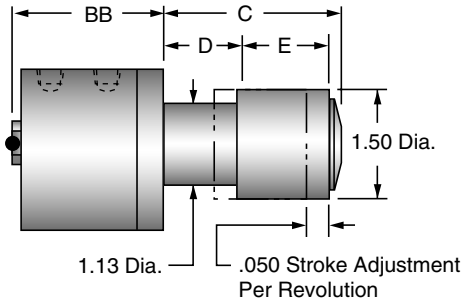

Action –XDR Original Series
Double Rod, Double Acting

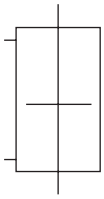

See page 1.16 for
Mounting Bolts
Force Area = 1.76
Seal Kit = 221-SK

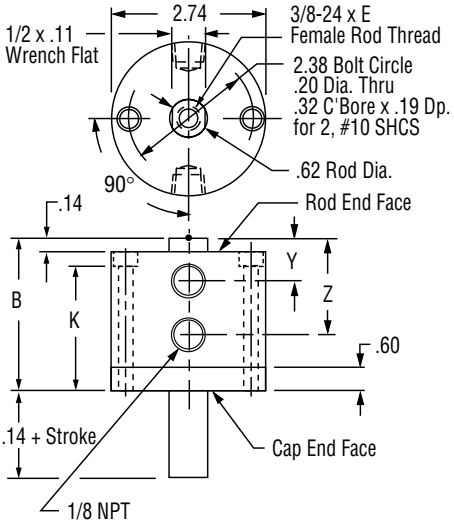

Strokes AA–A are Ported on Opposite Sides

Stroke, Inches	1/8	1/4	1/2	3/4	1	1 1/2	2	3	4
Stroke, Letter	AA	A	B	C	D	E	F	G	H
B	1.61	1.74	2.24	2.49	2.80	3.30	3.80	4.80	5.80
E	.38	.44	.63	.63	.75	.75	.75	.75	.75
K	1.28	1.41	1.91	2.16	2.47	2.97	3.47	4.47	5.47
Y	.64	.64	.52	.52	.52	.52	.52	.52	.52
Z	.64	.64	1.27	1.52	1.83	2.33	2.83	3.83	4.83
Weight, lb.	.97	1.03	1.35	1.46	1.63	1.91	2.19	2.73	3.28

Action –XDRK Original Series
Double Rod, Double Acting, Nonrotating

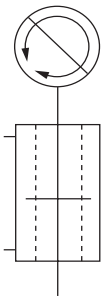

See page 1.16 for
Mounting Bolts
Force Area = 1.70
Seal Kit = 221-SK-K

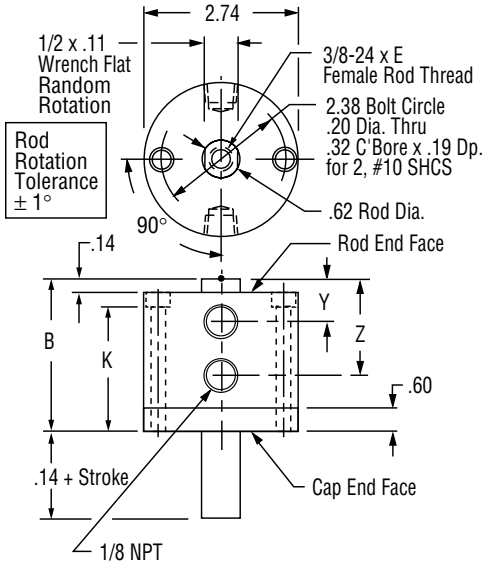

Strokes AA–A are Ported on Opposite Sides

Stroke, Inches	1/8	1/4	1/2	3/4	1	1 1/2	2	3	4
Stroke, Letter	AA	A	B	C	D	E	F	G	H
B	1.61	1.74	2.24	2.49	2.80	3.30	3.80	4.80	5.80
E	.38	.44	.63	.63	.75	.75	.75	.75	.75
K	1.28	1.41	1.91	2.16	2.47	2.97	3.47	4.47	5.47
Y	.64	.64	.52	.52	.52	.52	.52	.52	.52
Z	.64	.64	1.27	1.52	1.83	2.33	2.83	3.83	4.83
Weight, lb.	1.05	1.11	1.44	1.55	1.73	2.01	2.30	2.86	3.42

Action –ODR Original Series
Double Rod, Single Acting, Spring Retracted

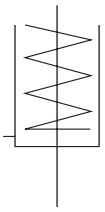

See page 1.16 for
Mounting Bolts
Force Area = 1.76
Seal Kit = 221-SK

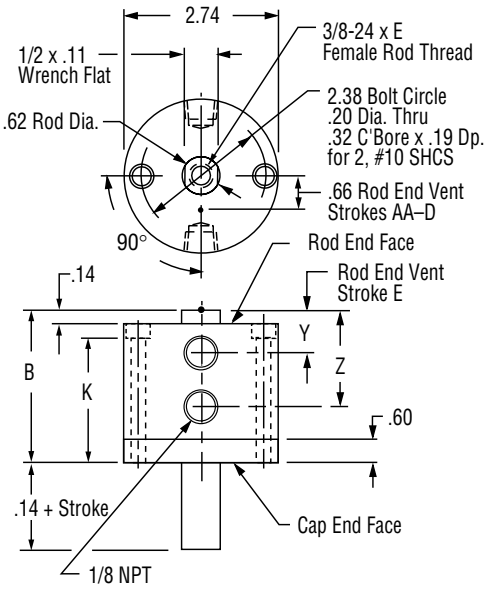

Stroke, Inches	1/8	1/4	1/2	3/4	1	1 1/2
Stroke, Letter	AA	A	B	C	D	E
B	1.61	1.74	2.24	2.49	2.80	4.80
E	.38	.44	.63	.63	.75	.75
K	1.28	1.41	1.91	2.16	2.47	4.47
Y	Rod End Vent Face					.52
Z	.64	.77	1.27	1.52	1.83	3.83
Weight, lb.	.95	1.01	1.30	1.42	1.58	1.86
Spring Return Forces, lb.						
Preload	15.0	8.5	8.5	6.0	4.8	6.0
End of Stroke	20.0	20.0	20.0	18.0	20.0	18.0

Prefix Option -M Metric Cylinder & Rod Thread, 41.3mm Bore
Available on Original Series with Actions: -XDR, -XDRK, -ODR
Also see *Option Information* on page 1.7.

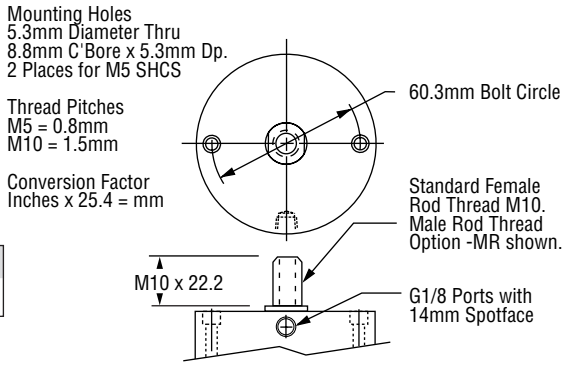

Stroke mm	3.2	6.4	12.7	19.1	25.4	38.1	50.8	76.2	101.6
Stroke Letter	AA	A	B	C	D	E	F	G	H

The **Suffix Options** charted on the right are available on Original Series with the Actions indicated (✓). They require no dimensional changes from the Standard Specifications on page 1.39. – *Also see Option Information on pages 1.7 thru 1.15.*

	T	V	Q	H	N	C1–C7	LF	LR	LFR	BF	BR	BFR	P14	13	25
-XDR	✓	✓	✓	✓	✓	✓	✓	✓	✓	✓	✓	✓	✓	✓	✓
-XDRK	NA	✓	✓	NA	✓	✓	NA	✓	NA	✓	✓	✓	✓	✓	✓
-ODR	NA	✓	✓	✓	✓	NA	NA	✓	NA	NA	✓	NA	✓	✓	✓

Suffix Options -MR, -MR1, -MR2 Male Rod Thread

Available on Original Series with Actions -XDR, -XDRK, -ODR.

For Rod End only use –MR
For Cap End only use –MR1
For Both Ends –MR2

Also see Option Information on Page 1.8.

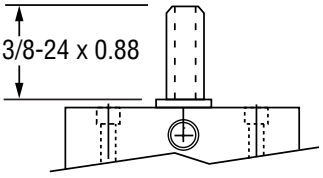

Suffix Options -F, -F1, -F2 Threaded Nose Mount

Available on Original Series with Actions -XDR, -XDRK, -ODR.
For Rod End only use **-F**
For Cap End only use **-F1**
For Both Ends use **-F2**
Also see Option Information on page 1.13.

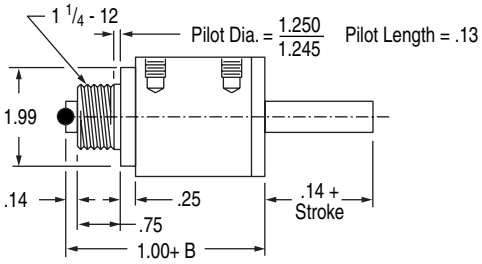

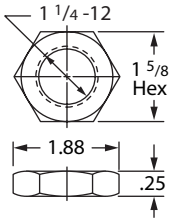

Part No. 22100-195
Mounting Nut is included
Material: Zinc Plated Steel

Suffix Option -E ***Specifies Magnetic Piston and Dovetail Mounting Slot(s)***
Strokes are NOT affected by magnetic piston.

– Sensors Must be Ordered Separately
See Sensor Models Available page 1.14

1 5/8" (221) Bore

Sensors available for "A"strokes and longer.
Stroke A is ported on opposite sides.

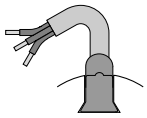

1/4" 60° Dovetail Profile of Sensor & Mounting Slot.

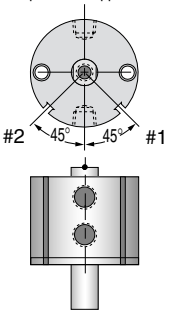

Quick Reference to Standard Strokes
Use the appropriate Stroke Letter in the Model Number

Available on Original Series

	Stroke	Action XDR	Action XDRK
Sensor Slots at Positions #1 and # 2	1/4	A	Not Available
	1/2	B	B
	3/4	C	C
	1	D	D
Sensor Slot at Position #1 only	1 1/2	E	E
	2	F	F
	3	G	G
	4	H	H

1

Model Number Code

Prefix Options	Stroke		Bore		Action		Suffix Options
Leave blank if none desired	D	–	321	–	X	–	MR

Metric	M
See pages 1.7, 1.43 & 1.46	

Bore	Code
2"	321
50.8mm	321

Standard Strokes

Original Series

Action	X XK XDR XDRK	O ODR	OP
Stroke			
1/8	AB	AB	AB
1/4	AA	AA	AA
3/8	A	A	A
1/2	B	B	B
3/4	C	C	C
1	D	D	D
1 1/2	E	E	–
2	F	–	–
3	G	–	–
4	H	–	–

"T" Series Includes PTFE piston bearing

Action	X XK	O	OP
Stroke			
1/8	TA	TA	TA
1/4	TB	TB	TB
1/2	TC	TC	TC
3/4	TD	TD	TD
1 1/4	TE	TE	–
1 3/4	TF	–	–
2 3/4	TG	–	–
3 3/4	TH	–	–

Grey shading indicates sensors are not available.

Strokes are NOT affected by magnetic piston Option "E"

Action

Single rod

Double acting	**-X**
Double acting, Nonrotating Internal guide pins - 150 psi max	**-XK**
Single acting, spring retracted	**-O**
Single acting, spring extended	**-OP**

Double rod

Double acting	**-XDR**
Double acting, Nonrotating Internal guide pins - 150 psi max	**-XDRK**
Single acting, spring retracted	**-ODR**

See pages 1.5 & 1.6 for Action Information.
See pages 1.42 & 1.45 for Standard Specifications

HOW TO ORDER

1. Under ***Stroke*** – select letter(s) for desired Series and Stroke.
2. Under ***Bore*** – select **321** for 2" bore.
   Seven Other Bore Sizes are Available

Bore	Bore Code	See page
1/2"	5	1.17
3/4"	7	1.23
1 1/8"	121	1.29
1 5/8"	221	1.35
2 1/2"	521	1.47
3"	721	1.53
4"	1221	1.59

3. Under ***Action*** – select letter(s) for desired action.
4. Under ***Prefix & Suffix Options***– select letter(s) for desired options and add to model number.

EXAMPLES

B-321-X
Original Series, 1/2" stroke - 2" Bore - Single Rod, Double Acting

TD-321-X-MR
"T" Series, 3/4" Stroke - 2" Bore - Single Rod, Double Acting - Male Rod Thread

Suffix Options

Male rod thread: Single rod		**-MR**
Double rod, rod end		**-MR**
Double rod, cap end		**-MR1**
Double rod, both ends		**-MR2**
PTFE seals		**-T**
Viton seals		**-V**
Quad seals		**-Q**
External guide, nonrotating for load guiding (See page 1.65)		**-G**
Hydraulic: Standard cover		**-H**
Thick cover		**-HHC**
Air service: Thick cover		**-HC**
1/4 NPT ports		**-P14**
Hole thru double rod shaft: 5/32" hole		**-16**
Plus size 5/16" hole 150 psi max		**-31**
Finish: **ProCoat**™ (Electroless Nickel)		**-N**
Stroke collar: 1/4"	**-C2**	1/8" **-C1**
1/2"	**-C4**	3/8" **-C3**
3/4"	**-C6**	5/8" **-C5**
		7/8" **-C7**
Sound limiters:	Rod end	**-LF**
	Cap end	**-LR**
	Both ends	**-LFR**
Rubber Bumpers:	Rod end	**-BF**
	Cap end	**-BR**
	Both ends	**-BFR**
Adjustable extend stroke (Full stroke adjustment is standard)		**-AS**
Adjustable retract stroke (Over 1" adjustment add desired length, e.g. -RS2)		**-RS**
Clevis mount:	Ports in-line with slot	**-PM**
	Ports 90° to slot	**-SM**
Eye mount:	Ports in-line with tang	**-EPM**
	Ports 90° to tang	**-ESM**
Magnetic piston & sensor mounting slot(s) Order sensors separately. See page 1.14. Stroke length determines number of mounting slots. See page 1.14, 1.44, 1.46		**-E**

See pages 1.3 – 1.15 for general option information and pages 1.43, 1.44 & 1.46 for option specifications of 2" bore models.

A complete library of cylinder CAD drawings is available from your local Fabco-Air Distributor or from the Fabco-Air web site – http://www.fabco-air.com

Action –X
Double Acting

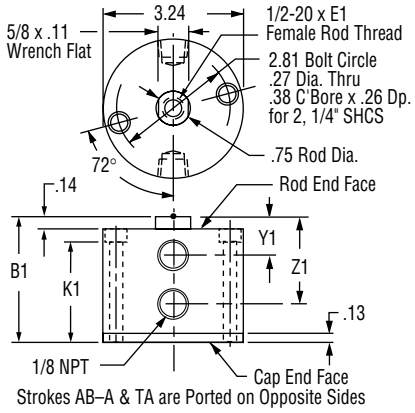

Strokes AB–A & TA are Ported on Opposite Sides

See page 1.16 for Mounting Bolts.
Push area = 3.14
Pull area = 2.70
Seal Kits for Series:
Original = 321-SK
"T" = 321-SKG

Action –XK
Double Acting
Nonrotating

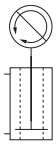

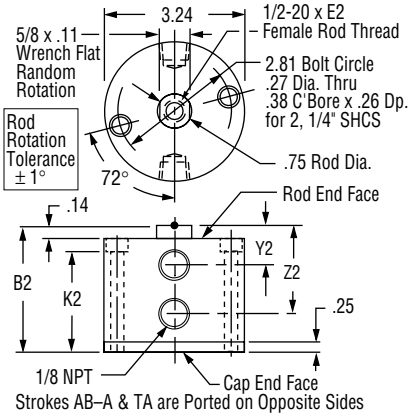

Strokes AB–A & TA are Ported on Opposite Sides

See page 1.16 for Mounting Bolts.
Push area = 2.94
Pull area = 2.50
Seal Kits for Series:
Original = 321-SK-K
"T" = 321-SKG-K

Original Series

Stroke, Inches	1/8	1/4	3/8	1/2	3/4	1	1 1/2	2	3	4
Stroke, Letter	AB	AA	A	B	C	D	E	F	G	H
Action –X Double Acting										
B1	1.20	1.33	1.45	1.64	2.02	2.39	2.89	3.39	4.39	5.39
E1	.40	.50	.63	.63	.75	.88	.88	.88	.88	.88
K1	.80	.93	1.05	1.24	1.62	1.99	2.49	2.99	3.99	4.99
Y1	.52	.52	.52	.52	.52	.52	.52	.52	.52	.52
Z1	.70	.83	.95	1.14	1.52	1.89	2.39	2.89	3.89	4.89
Weight, lb.	.89	.96	1.04	1.16	1.45	1.70	2.02	2.34	2.97	3.58
Action –XK Double Acting, Nonrotating										
B2	1.33	1.46	1.58	1.77	2.15	2.52	3.02	3.52	4.52	5.52
E2	.40	.50	.63	.63	.75	.88	.88	.88	.88	.88
K2	.93	1.06	1.18	1.37	1.75	2.12	2.62	3.12	4.12	5.12
Y2	.52	.52	.52	.52	.52	.52	.52	.52	.52	.52
Z2	.70	.83	.95	1.14	1.52	1.89	2.39	2.89	3.89	4.89
Weight, lb.	1.02	1.09	1.18	1.30	1.60	1.85	2.19	2.52	3.18	3.82
Action –O Single Acting, Spring Retracted										
B3	1.20	1.33	1.45	1.64	2.02	2.39	4.39	NA*	NA*	NA*
E3	.40	.50	.63	.63	.75	.88	.88	NA*	NA*	NA*
K3	.80	.93	1.05	1.24	1.62	1.99	3.99	NA*	NA*	NA*
Y3	Rod End Face Vent						.52	NA*	NA*	NA*
Z3	.70	.83	.95	1.14	1.52	1.89	3.89	NA*	NA*	NA*
Weight,. lb.	.85	.97	1.01	1.13	1.36	1.61	3.11	NA*	NA*	NA*
Preload, lb.	12.0	6.2	12.0	7.0	5.0	4.7	5.0	NA*	NA*	NA*
End of Stroke, lb.	18.0	18.0	21.0	20.0	15.5	20.0	20.0	NA*	NA*	NA*
Action –OP Single Acting, Spring Extended										
B4	1.71	1.96	2.21	2.52	3.14	3.89	NA*	NA*	NA*	NA*
E4	.40	.50	.63	.63	.75	.88	NA*	NA*	NA*	NA*
K4	1.18	1.30	1.43	1.62	1.99	2.49	NA*	NA*	NA*	NA*
Y4	.65	.77	.90	1.02	1.27	1.52	NA*	NA*	NA*	NA*
Z4	.83	1.08	1.33	1.64	2.27	2.89	NA*	NA*	NA*	NA*
Weight, lb.	1.22	1.29	1.36	1.49	1.76	2.13	NA*	NA*	NA*	NA*
Preload, lb.	8.5	4.5	9.5	7.0	6.0	4.7	NA*	NA*	NA*	NA*
End of Stroke, lb.	15.0	15.0	20.0	20.0	18.0	20.0	NA*	NA*	NA*	NA*

"T" Series

Stroke, Inches	1/8	1/4	1/2	3/4	1 1/4	1 3/4	2 3/4	3 3/4
Stroke, Letter	TA	TB	TC	TD	TE	TF	TG	TH
Action –X Double Acting								
B1	1.45	1.64	2.02	2.39	2.89	3.39	4.39	5.39
E1	.63	.63	.75	.88	.88	.88	.88	.88
K1	1.05	1.24	1.62	1.99	2.49	2.99	3.99	4.99
Y1	.52	.52	.52	.52	.52	.52	.52	.52
Z1	.95	1.14	1.52	1.89	2.39	2.89	3.89	4.89
Weight, lb.	1.10	1.30	1.56	1.84	2.16	2.48	3.11	3.71
Action –XK Double Acting, Nonrotating								
B2	1.58	1.77	2.15	2.52	3.02	3.52	4.52	5.52
E2	.63	.63	.75	.88	.88	.88	.88	.88
K2	1.18	1.37	1.75	2.12	2.62	3.12	4.12	5.12
Y2	.52	.52	.52	.52	.52	.52	.52	.52
Z2	.95	1.14	1.52	1.89	2.39	2.89	3.89	4.89
Weight, lb.	1.24	1.44	1.71	2.00	2.33	2.66	3.32	3.95
Action –O Single Acting, Spring Retracted								
B3	1.45	1.64	2.02	2.39	4.39	NA*	NA*	NA*
E3	.63	.63	.75	.88	.88	NA*	NA*	NA*
K3	1.05	1.24	1.62	1.99	3.99	NA*	NA*	NA*
Y3	Rod End Face Vent				.52	NA*	NA*	NA*
Z3	.95	1.14	1.52	1.89	3.89	NA*	NA*	NA*
Weight,. lb.	1.01	1.13	1.36	1.61	3.25	NA*	NA*	NA*
Preload, lb.	11.3	7.3	6.2	7.6	4.8	NA*	NA*	NA*
End of Stroke, lb.	21.0	20.0	15.5	20.0	20.0	NA*	NA*	NA*
Action –OP Single Acting, Spring Extended								
B4	1.96	2.27	2.89	3.61	NA*	NA*	NA*	NA*
E4	.63	.63	.75	.88	NA*	NA*	NA*	NA*
K4	1.43	1.62	1.99	2.49	NA*	NA*	NA*	NA*
Y4	.65	.77	1.02	1.25	NA*	NA*	NA*	NA*
Z4	1.08	1.33	1.64	2.27	NA*	NA*	NA*	NA*
Weight, lb.	1.50	1.63	1.89	2.26	NA*	NA*	NA*	NA*
Preload, lb.	10.7	7.0	6.0	4.7	NA*	NA*	NA*	NA*
End of Stroke, lb.	18.0	20.0	18.0	20.0	NA*	NA*	NA*	NA*

Action –O
Single Acting
Spring Retracted

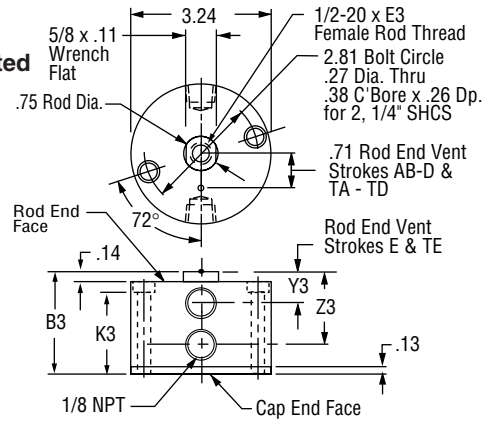

See page 1.16 for Mounting Bolts.
Push area = 3.14
See Chart for Spring Forces: Preload & End of Stroke
Seal Kits for Series:
Original = 321-SK
"T" = 321-SKG

Action –OP
Single Acting
Spring Extended

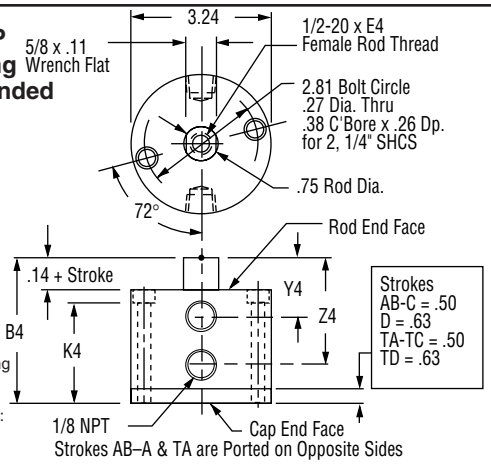

Strokes AB–A & TA are Ported on Opposite Sides

See page 1.16 for Mounting Bolts.
Pull area = 2.70
See Chart for Spring Forces: Preload & End of Stroke
Seal Kits for Series:
Original = 321-SK
"T" = 321-SKG

NA* = Not Available

1

Prefix Option -M Metric Cylinder & Rod Thread, 50.8mm Bore
Available on Original and "T" Series with Actions: -X, -XK, -O, -OP
Also see *Option Information* on page 1.7.

Original Series										
Stroke mm	3.2	6.4	9.5	12.7	19.1	25.4	38.1	50.8	76.2	101.6
Stroke Letter	AB	AA	A	B	C	D	E	F	G	H

"T" Series								
Stroke mm	3.2	6.4	12.7	19.1	31.8	44.5	69.9	95.3
Stroke Letter	TA	TB	TC	TD	TE	TF	TG	TH

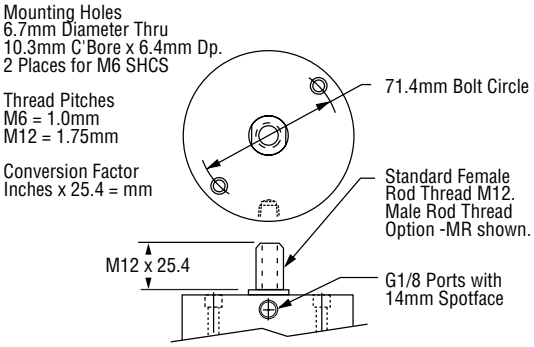

The **Suffix Options** charted on the right are available on Original and "T" Series with the Actions indicated (✓). They require no dimensional changes from the Standard Specifications on page 1.42.
– Also see Option Information on pages 1.7 thru 1.15.

	T	V	Q	H	N	C1–C7	LF	LR	LFR	BF	BR	BFR	P14
-X	✓	✓	✓	✓	✓	✓	✓	✓	✓	✓	✓	✓	✓
-XK	NA	✓	✓	NA	✓	✓	NA	✓	NA	✓	✓	✓	✓
-O	NA	✓	✓	✓	✓	NA	NA	✓	NA	NA	✓	NA	✓
-OP	NA	✓	✓	✓	✓	✓	✓	✓	✓	✓	NA	NA	✓

Suffix Options -PM & -SM Clevis Mount
Available on Original and "T" Series
with Actions: -X, -XK, -O, -OP
Also see *Option Information* on page 1.13.

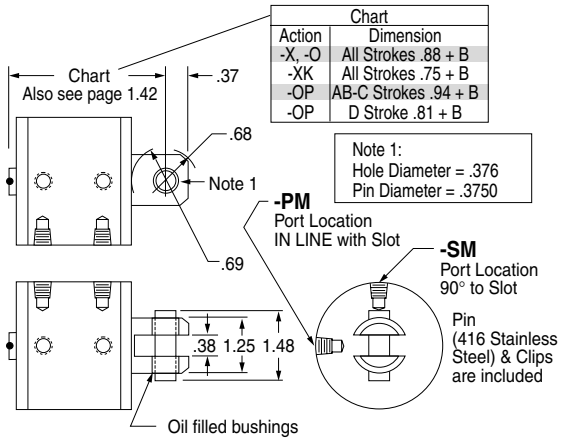

Suffix Options -EPM & -ESM Eye Mount
Available on Original and "T" Series
with Actions: -X, -XK, -O, -OP
Also see *Option Information* on page 1.13.

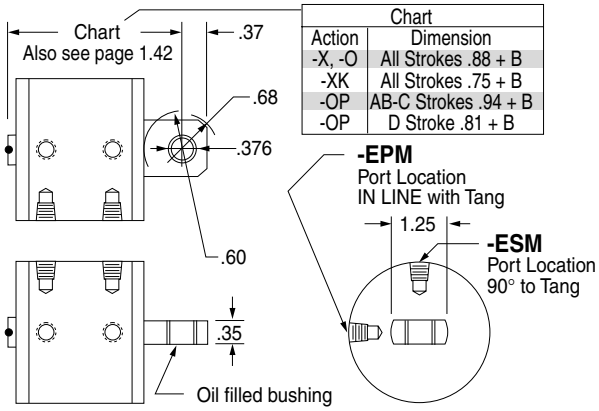

EM-221 Eye Bracket Kit
Mates with Clevis Mount above.
Order separately.

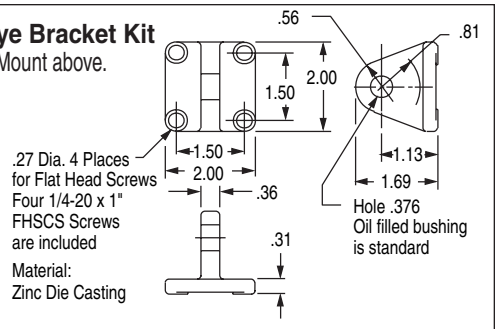

PM-221 Clevis Bracket Kit Mates with Eye Mount above.
Order separately.

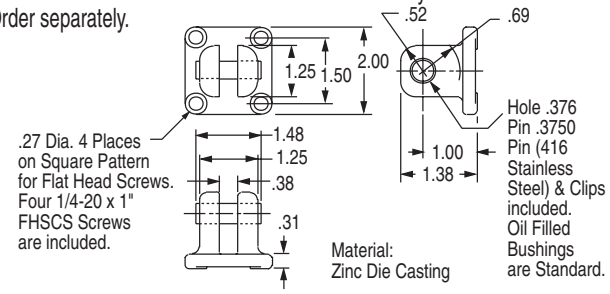

RC-Chart Rod Clevis and Pin Threaded Stud mates with Female Rod thread in the ***Pancake®*** Cylinders. Slot and Pin Mate with EM-121 Eye Bracket shown on the right.

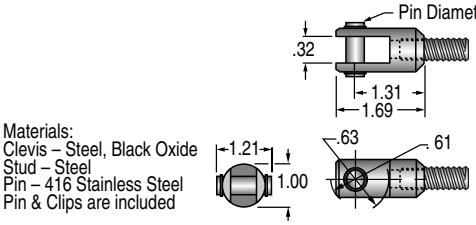

CHART 1/2-20 x Thread Length Metric M12 x Thread Length		
Rod Clevis Number	Strokes	Thread Length
RC-54	AB–AA	.39"
RC-56	A–H	.62"
MRC-54	MAB–MAA	9.9mm
MRC-56	MA–MH	15.7mm

EM-121 Eye Bracket Kit
Mates with any
Rod Clevis shown
on the left.

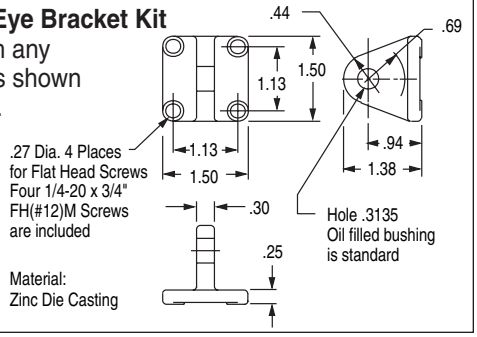

Suffix Option -HHC Hydraulic & -HC Air
Available on Original and "T" Series with Action -X, -O.

Also see *Option Information* on page 1.9 for Pressure and Mounting details.

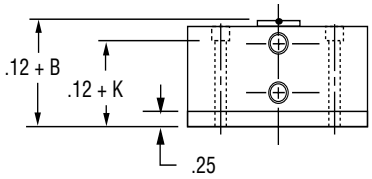

Suffix Option -MR Male Rod Thread
Available on Original and "T" Series with Actions: -X, -XK, -O, -OP.
Also see *Option Information* on page 1.8.

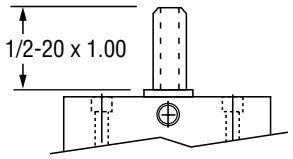

Suffix Option -RS Adjustable Retract Stroke
Available on Original and "T" Series
with Actions: -X, -XK, -O, -OP
Also see *Option Information* on page 1.11.

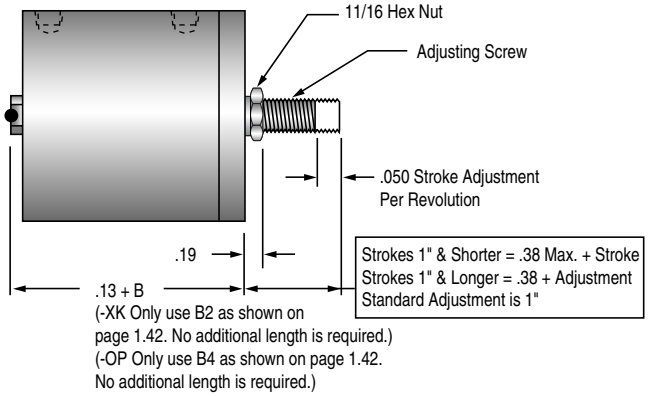

Suffix Option -E ***Specifies Magnetic Piston and Dovetail Mounting Slot(s)***
Strokes are NOT affected by magnetic piston.

– Sensors Must be Ordered Separately
See Sensor Models Available page 1.14

2" (321) Bore

Sensors available for "AA" & "TA" strokes and longer. Strokes AA – A and TA are ported on opposite sides.

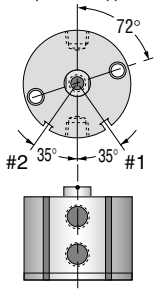

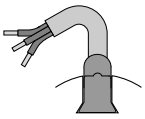

1/4" 60° Dovetail Profile of Sensor & Mounting Slot.

Quick Reference to Standard Strokes
Use the appropriate Stroke Letter in the Model Number

	Available on Original Series		Available on "T" Series	
	Stroke	Action X, XK	Stroke	Action X, XK
Sensor Slots at Positions #1 and # 2	1/4	AA	1/8	TA
	3/8	A	1/4	TB
	1/2	B	1/2	TC
	3/4	C	3/4	TD
	1	D		
Sensor Slot at Position #1 only	1 1/2	E	1 1/4	TE
	2	F	1 3/4	TF
	3	G	2 3/4	TG
	4	H	3 3/4	TH

Suffix Option -AS Adjustable Extend Stroke
Available on Original Series with Actions: -X, -XK, -O
Also see *Option Information* on page 1.11.

Stroke Inches		1/8	1/4	3/8	1/2	3/4	1	1-1/2	2	3	4
Stroke Letter		AB	AA	A	B	C	D	E	F	G	H
Actions: -X, -XK	BB	1.83	1.95	2.08	2.27	2.64	3.02	3.52	4.02	5.02	6.02
Actions:-O	BB	1.83	1.95	2.08	2.27	2.64	3.02	5.02	NA	NA	NA
	C	1.67	1.91	2.17	2.41	2.91	3.41	4.41	5.41	7.41	9.41
	D	0.63	0.75	0.88	1.00	1.25	1.50	2.00	2.50	3.50	4.50
	E	0.88	1.00	1.13	1.25	1.50	1.75	2.25	2.75	3.75	4.75

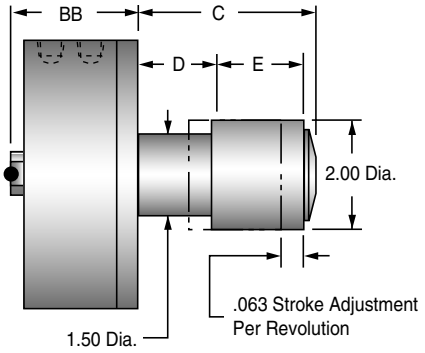

1

Action –XDR Original Series
Double Rod, Double Acting

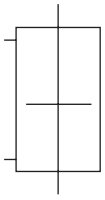

See page 1.16 for
Mounting Bolts
Force Area = 2.70
Seal Kit = 321-SK

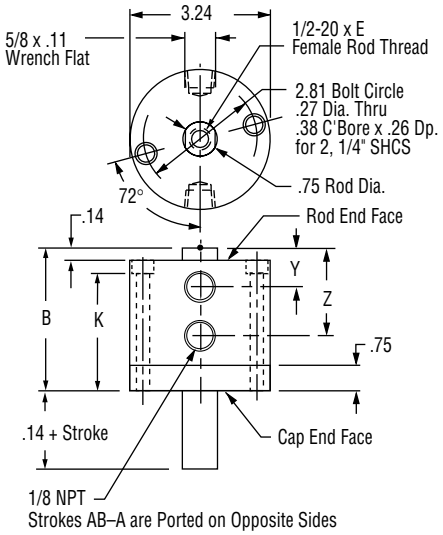

Stroke, Inches	1/8	1/4	3/8	1/2	3/4	1	1-1/2	2	3	4
Stroke, Letter	AB	AA	A	B	C	D	E	F	G	H
B	1.83	1.95	2.08	2.27	2.64	3.02	3.52	4.02	5.02	6.02
E	.40	.50	.63	.63	.75	.88	.88	.88	.88	.88
K	1.44	1.56	1.69	1.89	2.25	2.63	3.13	3.63	4.63	5.63
Y	.52	.52	.52	.52	.52	.52	.52	.52	.52	.52
Z	.70	.83	.95	1.14	1.52	1.89	2.39	2.89	3.89	4.89
Weight, lb.	1.56	1.64	1.72	1.86	2.15	2.44	2.80	3.18	3.94	4.72

Action –XDRK Original Series
Double Rod, Double Acting, Nonrotating

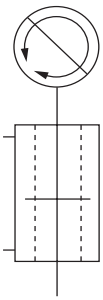

See page 1.16 for
Mounting Bolts
Force Area = 2.51
Seal Kit = 321-SK-K

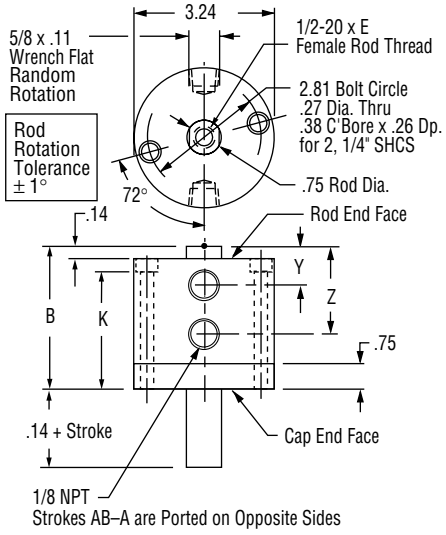

Stroke, Inches	1/8	1/4	3/8	1/2	3/4	1	1-1/2	2	3	4
Stroke, Letter	AB	AA	A	B	C	D	E	F	G	H
B	1.83	1.95	2.08	2.27	2.64	3.02	3.52	4.02	5.02	6.02
E	.40	.50	.63	.63	.75	.88	.88	.88	.88	.88
K	1.44	1.56	1.69	1.89	2.25	2.63	3.13	3.63	4.63	5.63
Y	.52	.52	.52	.52	.52	.52	.52	.52	.52	.52
Z	.70	.83	.95	1.14	1.52	1.89	2.39	2.89	3.89	4.89
Weight, lb.	1.70	1.78	1.87	2.01	2.31	2.61	2.98	3.37	4.16	4.97

Action –ODR Original Series
Double Rod, Single Acting, Spring Retracted

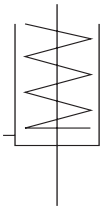

See page 1.16 for
Mounting Bolts
Force Area = 2.70
Seal Kit = 321-SK

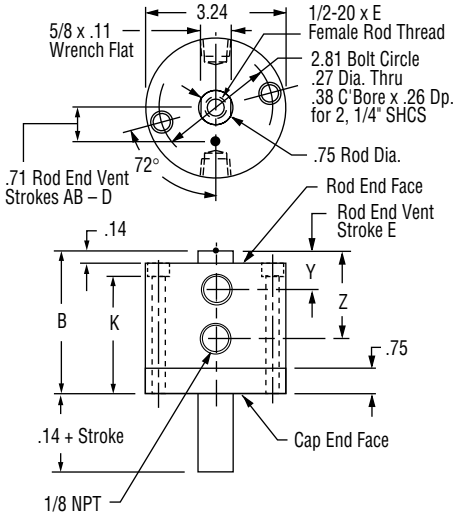

Stroke, Inches	1/8	1/4	3/8	1/2	3/4	1	1-1/2
Stroke, Letter	AB	AA	A	B	C	D	E
B	1.83	1.95	2.08	2.27	2.64	3.02	5.02
E	.40	.50	.63	.63	.75	.88	.88
K	1.44	1.56	1.69	1.89	2.25	2.63	4.63
Y	Rod End Face Vent						.52
Z	.70	.83	.95	1.14	1.52	1.89	3.89
Weight, lb.	1.51	1.60	1.69	1.81	2.10	2.39	4.16
Spring Return Forces, lb.							
Preload	12.0	6.2	12.0	7.0	5.0	4.7	5.0
End of Stroke	18.0	18.0	21.0	20.0	15.5	20.0	20.0

Prefix Option -M Metric Cylinder & Rod Thread, 50.8mm Bore
Available on Original Series with Actions: -XDR, -XDRK, -ODR
Also see *Option Information* on page 1.7.

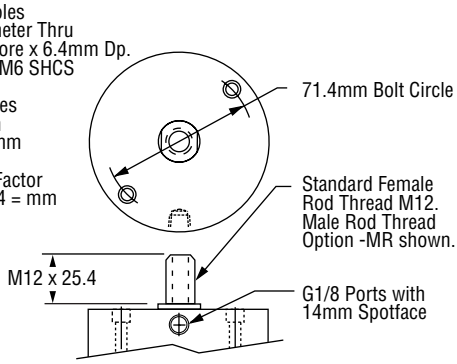

Stroke mm	3.2	6.4	9.5	12.7	19.1	25.4	38.1	50.8	76.2	101.6
Stroke Letter	AB	AA	A	B	C	D	E	F	G	H

The **Suffix Options** charted on the right are available on Original Series with the Actions indicated (✓). They require no dimensional changes from the Standard Specifications on page 1.45. – *Also see Option Information on pages 1.7 thru 1.15.*

	T	V	Q	H	N	C1–C7	LF	LR	LFR	BF	BR	BFR	P14	16	31
-XDR	✓	✓	✓	✓	✓	✓	✓	✓	✓	✓	✓	✓	✓	✓	✓
-XDRK	NA	✓	✓	NA	✓	✓	NA	✓	NA	✓	✓	✓	✓	✓	✓
-ODR	NA	✓	✓	✓	✓	NA	NA	✓	NA	NA	✓	NA	✓	✓	✓

Suffix Options -MR, -MR1, -MR2 Male Rod Thread

Available on Original Series with Actions -XDR, -XDRK, -ODR.

For Rod End only use –MR
For Cap End only use –MR1
For Both Ends –MR2

Also see Option Information on Page 1.8

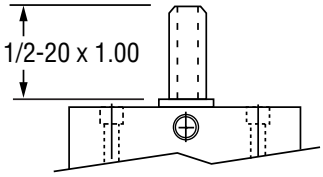

Suffix Option -E ***Specifies Magnetic Piston and Dovetail Mounting Slot(s)***
Strokes are NOT affected by magnetic piston.

– Sensors Must be Ordered Separately
See Sensor Models Available page 1.14

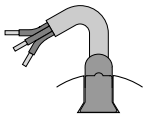

1/4" 60° Dovetail Profile of Sensor & Mounting Slot.

2" (321) Bore

Sensors available for "AA"strokes and longer. Strokes AA – A are ported on opposite sides.

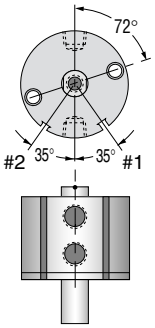

Quick Reference to Standard Strokes
Use the appropriate Stroke Letter in the Model Number

Available on Original Series

	Stroke	Action XDR, XDRK
Sensor Slots at Positions #1 and # 2	1/4	AA
	3/8	A
	1/2	B
	3/4	C
	1	D
Sensor Slot at Position #1 only	1 1/2	E
	2	F
	3	G
	4	H

1

Model Number Code

Prefix Options	Stroke		Bore		Action		Suffix Options
Leave blank if none desired	C	–	521	–	X	–	MR

Metric	M
See pages 1.7, 1.49 & 1.52	

Bore	Code
2 1/2"	521
63.5mm	521

Standard Strokes

Original Series

Action	X XK XDR XDRK	O ODR	OP
Stroke			
1/8	AB	AB	AB
1/4	AA	AA	AA
1/2	A	A	A
3/4	B	B	B
1	C	C	C
1 1/2	D	D	–
2	E	–	–
3	F	–	–
4	G	–	–

"T" Series Includes PTFE piston bearing

Action	X XK	O	OP
Stroke			
1/4	TA	TA	TA
1/2	TB	TB	TB
3/4	TC	TC	TC
1 1/4	TD	TD	–
1 3/4	TE	–	–
2 3/4	TF	–	–
3 3/4	TG	–	–

Grey shading indicates sensors are not available.

Strokes are NOT affected by magnetic piston Option "E"

Action

Single rod

Double acting	-X
Double acting, Nonrotating Internal guide pins - 150 psi max	-XK
Single acting, spring retracted	-O
Single acting, spring extended	-OP

Double rod

Double acting	-XDR
Double acting, Nonrotating Internal guide pins - 150 psi max	-XDRK
Single acting, spring retracted	-ODR

See pages 1.5 & 1.6 for Action Information.
See pages 1.48 & 1.51 for Standard Specifications

HOW TO ORDER

1. Under ***Stroke*** – select letter(s) for desired Series and Stroke.
2. Under ***Bore*** – select **521** for 2 1/2" bore.
   Seven Other Bore Sizes are Available

Bore	Bore Code	See page
1/2"	5	1.17
3/4"	7	1.23
1 1/8"	121	1.29
1 5/8"	221	1.35
2"	321	1.41
3"	721	1.53
4"	1221	1.59

3. Under ***Action*** – select letter(s) for desired action.
4. Under ***Prefix & Suffix Options***– select letter(s) for desired options and add to model number.

EXAMPLES

A-521-X
Original Series, 1/2" stroke - 2 1/2" Bore - Single Rod, Double Acting

TC-521-X-MR
"T" Series, 3/4" Stroke - 2 1/2" Bore - Single Rod, Double Acting - Male Rod Thread

Suffix Options

Male rod thread: Single rod		-MR
Double rod, rod end		-MR
Double rod, cap end		-MR1
Double rod, both ends		-MR2
PTFE seals		-T
Viton seals		-V
Quad seals		-Q
External guide, nonrotating for load guiding (See page 1.65)		-G
Hydraulic: Standard cover		-H
Thick cover		-HHC
Air service: Thick cover		-HC
1/4 NPT ports		-P14
Hole thru double rod shaft: 5/32" hole		-16
Plus size: 1/4" hole 150 psi max		-25
Finish: **ProCoat**™ (Electroless Nickel)		-N
Stroke collar: 1/4"	-C2	1/8" -C1
1/2"	-C4	3/8" -C3
3/4"	-C6	5/8" -C5
		7/8" -C7
Sound limiters:	Rod end	-LF
	Cap end	-LR
	Both ends	-LFR
Rubber Bumpers:	Rod end	-BF
	Cap end	-BR
	Both ends	-BFR
Adjustable extend stroke (Full stroke adjustment is standard)		-AS
Adjustable retract stroke (Over 1" adjustment add desired length, e.g. -RS2)		-RS
Clevis mount:	Ports in-line with slot	-PM
	Ports 90° to slot	-SM
Magnetic piston & sensor mounting slot(s) Order sensors separately. See page 1.14. Stroke length determines number of mounting slots. See page 1.14, 1.50, 1.52		-E

See pages 1.3 – 1.15 for general option information and pages 1.49, 1.50 & 1.52 for option specifications of 2 1/2" bore models.

A complete library of cylinder CAD drawings is available from your local Fabco-Air Distributor or from the Fabco-Air web site – http://www.fabco-air.com

Action –X
Double Acting

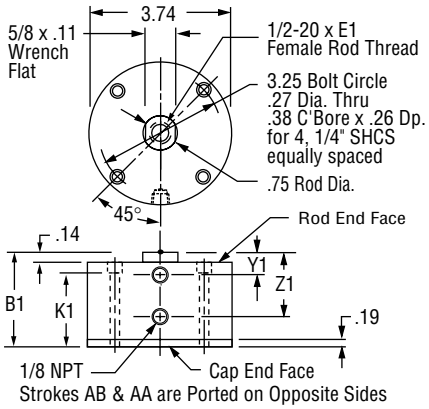

Strokes AB & AA are Ported on Opposite Sides

See page 1.16 for Mounting Bolts.
Push area = 4.91
Pull area = 4.47
Seal Kits for Series:
Original = 521-SK
"T" = 521-SKG

Action –XK
Double Acting
Nonrotating

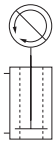

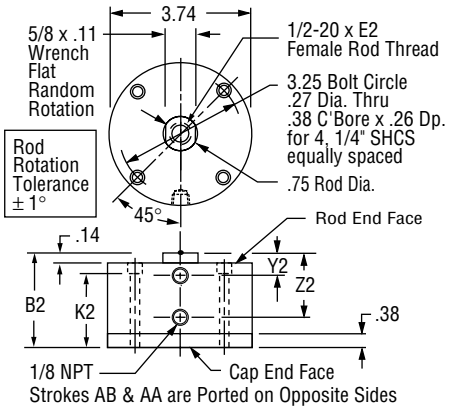

Strokes AB & AA are Ported on Opposite Sides

See page 1.16 for Mounting Bolts.
Push area = 4.71
Pull area = 4.27
Seal Kits for Series:
Original = 521-SK-K
"T" = 521-SKG-K

Original Series

Stroke, Inches	1/8	1/4	1/2	3/4	1	1 1/2	2	3	4
Stroke, Letter	AB	AA	A	B	C	D	E	F	G
Action –X Double Acting									
B1	1.45	1.58	1.83	2.20	2.33	2.83	3.33	4.33	5.33
E1	.56	.63	.63	.88	.88	.88	.88	.88	.88
K1	1.05	1.18	1.43	1.80	1.93	2.43	2.93	3.93	4.93
Y1	.52	.52	.52	.64	.64	.64	.64	.64	.64
Z1	.89	1.02	1.27	1.64	1.77	2.27	2.77	3.77	4.77
Weight, lb.	1.43	1.50	1.67	2.00	2.03	2.38	2.73	3.46	4.19
Action –XK Double Acting, Nonrotating									
B2	1.64	1.77	2.02	2.39	2.52	3.02	3.52	4.52	5.52
E2	.56	.63	.63	.88	.88	.88	.88	.88	.88
K2	1.24	1.37	1.62	1.99	2.12	2.62	3.12	4.12	5.12
Y2	.52	.52	.52	.64	.64	.64	.64	.64	.64
Z2	.89	1.02	1.27	1.64	1.77	2.27	2.77	3.77	4.77
Weight, lb.	1.64	1.72	1.89	2.23	2.27	2.63	3.00	3.75	4.51
Action –O Single Acting, Spring Retracted									
B3	1.45	1.58	1.83	2.20	2.33	4.33	NA*	NA*	NA*
E3	.56	.63	.63	.88	.88	.88	NA*	NA*	NA*
K3	1.05	1.13	1.43	1.80	1.93	3.93	NA*	NA*	NA*
Y3	Rod End Face Vent					.64	NA*	NA*	NA*
Z3	.89	1.02	1.27	1.64	1.77	3.77	NA*	NA*	NA*
Weight,. lb.	1.38	1.46	1.62	1.94	1.96	3.60	NA*	NA*	NA*
Preload, lb.	12.0	6.2	7.0	5.0	4.7	7.3	NA*	NA*	NA*
End of Stroke, lb.	18.0	18.0	20.0	15.5	20.0	20.0	NA*	NA*	NA*
Action –OP Single Acting, Spring Extended									
B4	2.02	2.27	2.77	3.39	3.77	NA*	NA†	NA*	NA*
E4	.56	.63	.63	.88	.88	NA*	NA†	NA*	NA*
K4	1.49	1.62	1.87	2.24	2.37	NA*	NA†	NA*	NA*
Y4	.65	.77	1.02	1.40	1.64	NA*	NA†	NA*	NA*
Z4	1.02	1.27	1.77	2.39	2.77	NA*	NA†	NA*	NA*
Weight, lb.	1.91	1.98	2.16	2.49	2.51	NA*	NA†	NA*	NA*
Preload, lb.	6.2	2.5	5.5	5.0	5.2	NA*	NA†	NA*	NA*
End of Stroke, lb.	12.0	12.0	18.5	15.5	20.5	NA*	NA†	NA*	NA*

"T" Series

Stroke, Inches	1/4	1/2	3/4	1 1/4	1 3/4	2 3/4	3 3/4
Stroke, Letter	TA	TB	TC	TD	TE	TF	TG
Action –X Double Acting							
B1	1.83	2.20	2.33	2.83	3.33	4.33	5.33
E1	.63	.88	.88	.88	.88	.88	.88
K1	1.43	1.80	1.93	2.43	2.93	3.93	4.93
Y1	.52	.64	.64	.64	.64	.64	.64
Z1	1.27	1.64	1.77	2.27	2.77	3.77	4.77
Weight, lb.	1.89	2.22	2.25	2.60	2.95	3.68	4.41
Action –XK Double Acting, Nonrotating							
B2	2.02	2.39	2.52	3.02	3.52	4.52	5.52
E2	.63	.88	.88	.88	.88	.88	.88
K2	1.62	1.99	2.12	2.62	3.12	4.12	5.12
Y2	.52	.64	.64	.64	.64	.64	.64
Z2	1.27	1.64	1.77	2.27	2.77	3.77	4.77
Weight, lb.	2.11	2.45	2.50	2.85	3.22	4.00	4.73
Action –O Single Acting, Spring Retracted							
B3	1.83	2.20	2.33	4.33	NA*	NA*	NA*
E3	.63	.88	.88	.88	NA*	NA*	NA*
K3	1.43	1.80	1.93	3.93	NA*	NA*	NA*
Y3	Rod End Face Vent			.64	NA*	NA*	NA*
Z3	1.27	1.64	1.77	3.77	NA*	NA*	NA*
Weight,. lb.	1.84	2.16	2.18	3.82	NA*	NA*	NA*
Preload, lb.	13.1	10.6	8.0	9.5	NA*	NA*	NA*
End of Stroke, lb.	20.0	15.5	20.0	20.0	NA*	NA*	NA*
Action –OP Single Acting, Spring Extended							
B4	2.52	3.14	3.52	NA*	NA*	NA*	NA*
E4	.63	.88	.88	NA*	NA*	NA*	NA*
K4	1.87	2.24	2.37	NA*	NA*	NA*	NA*
Y4	.77	1.14	1.39	NA*	NA*	NA*	NA*
Z4	1.52	2.14	2.52	NA*	NA*	NA*	NA*
Weight, lb.	2.38	2.71	2.73	NA*	NA*	NA*	NA*
Preload, lb.	11.2	12.4	10.2	NA*	NA*	NA*	NA*
End of Stroke, lb.	18.5	21.1	22.6	NA*	NA*	NA*	NA*

Action –O
Single Acting
Spring Retracted

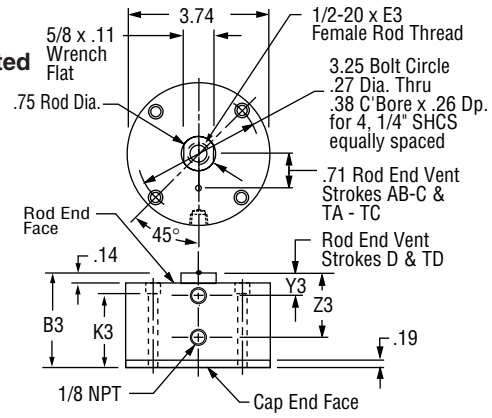

See page 1.16 for Mounting Bolts.
Push area = 4.91
See Chart for Spring Forces: Preload & End of Stroke
Seal Kits for Series:
Original = 521-SK
"T" = 521-SKG

Action –OP
Single Acting
Spring Extended

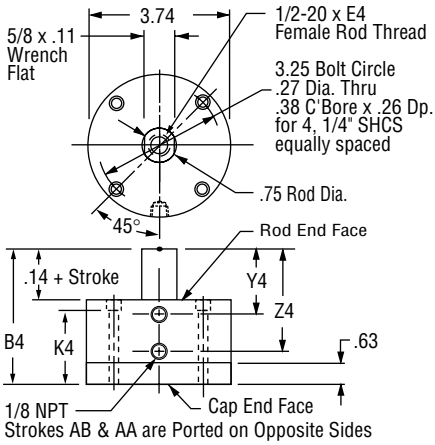

Strokes AB & AA are Ported on Opposite Sides

See page 1.16 for Mounting Bolts.
Pull area = 4.47
See Chart for Spring Forces: Preload & End of Stroke
Seal Kits for Series:
Original = 521-SK
"T" = 521-SKG

NA* = Not Available

Prefix Option -M Metric Cylinder & Rod Thread 63.5mm Bore
Available on Original and "T" Series with Actions: -X, -XK, -O, -OP
Also see *Option Information* on page 1.7.

Original Series								
Stroke mm	3.2	6.4	12.7	19.1	25.4	38.1	50.8	76.2	101.6
Stroke Letter	AB	AA	A	B	C	D	E	F	G

"T" Series							
Stroke mm	6.4	12.7	19.1	31.8	44.5	69.9	95.3
Stroke Letter	TA	TB	TC	TD	TE	TF	TG

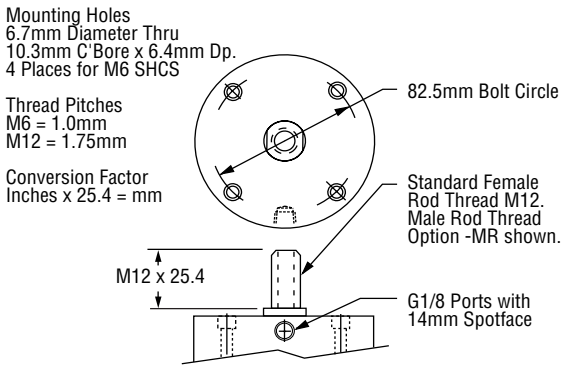

The **Suffix Options** charted on the right are available on Original and "T" Series with the Actions indicated (✓). They require no dimensional changes from the Standard Specifications on page 1.48.
– Also see Option Information on pages 1.7 thru 1.15.

	T	V	Q	H	N	C1–C7	LF	LR	LFR	BF	BR	BFR	P14
-X	✓	✓	✓	✓	✓	✓	✓	✓	✓	✓	✓	✓	✓
-XK	NA	✓	✓	✓	✓	✓	NA	✓	NA	✓	✓	✓	✓
-O	NA	✓	✓	✓	✓	NA	NA	✓	NA	NA	✓	NA	✓
-OP	NA	✓	✓	✓	✓	✓	✓	✓	✓	✓	NA	NA	✓

Suffix Options -PM & -SM Clevis Mount
Available On Original and "T" Series
with Actions: -X, -XK, -O, -OP
Also see *Option Information* on page 1.13.

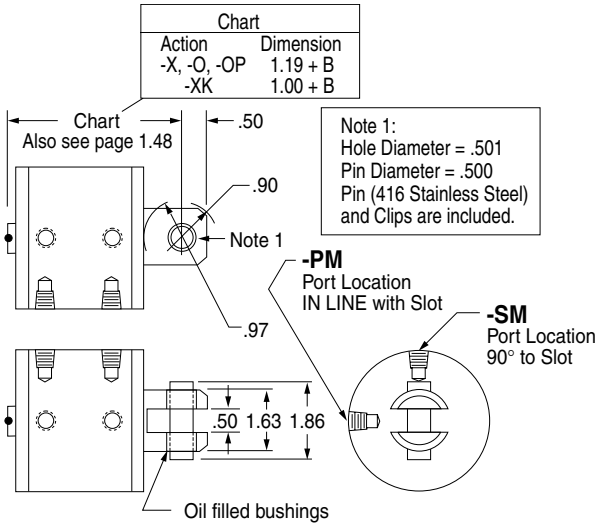

RC-Chart Rod Clevis and Pin
Threaded Stud mates with Female Rod thread in the ***Pancake®*** Cylinders.
Slot and Pin Mate with EM-121 Eye Bracket shown below.

Materials:
Clevis – Steel, Black Oxide
Stud – Steel
Pin – 416 Stainless Steel
Pin & Clips are included

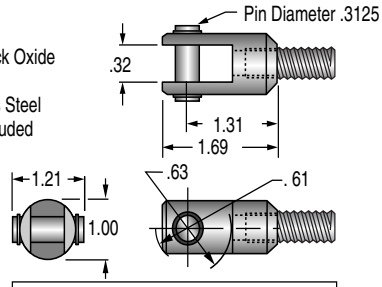

CHART 1/2-20 x Thread Length Metric M12 x Thread Length		
Rod Clevis Number	Strokes	Thread Length
RC-54 RC-56	AB AA–G	.39" .62"
MRC-54 MRC-56	MAB MAA–MG	9.9mm 15.7mm

EM-521 Eye Bracket Kit
Mates with Clevis Mount shown above.
Order separately.

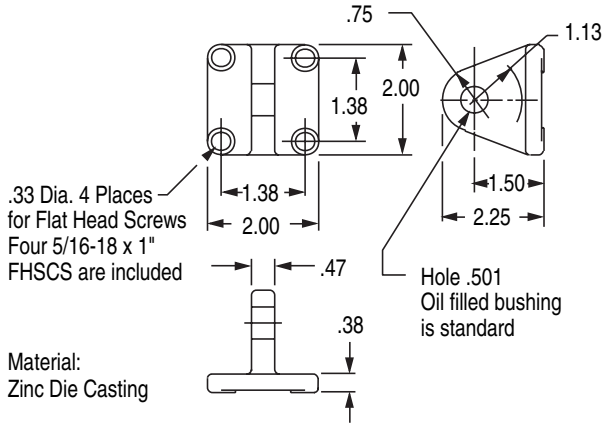

EM-121 Eye Bracket Kit
Mates with any Rod Clevis shown above.
Order separately.

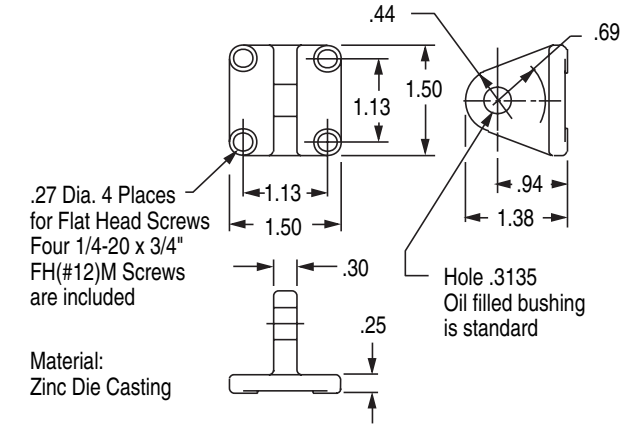

Suffix Option -HHC Hydraulic & -HC Air
Available on Original and "T" Series with Action -X, -O.

Also see *Option Information* on page 1.9 for Pressure and Mounting details.

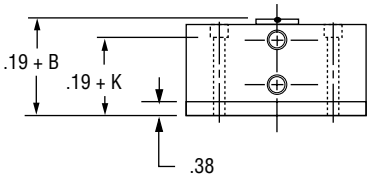

Suffix Option -MR Male Rod Thread
Available on Original and "T" Series with Actions: -X, -XK, -O, -OP.
Also see *Option Information* on page 1.8.

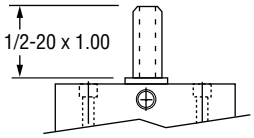

Suffix Option -RS Adjustable Retract Stroke
Available on Original and "T" Series with Actions: -X, -XK, -O, -OP
Also see *Option Information* on page 1.11.

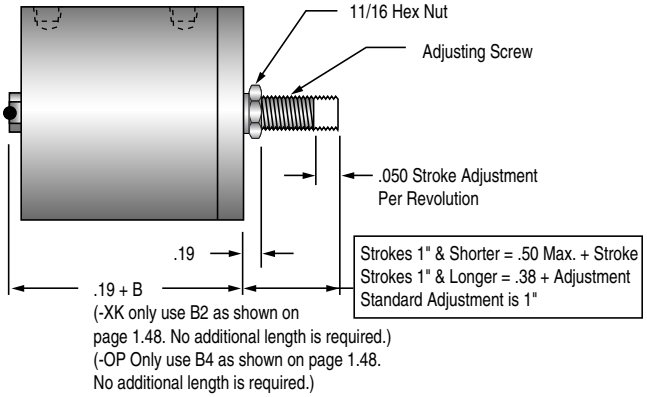

Suffix Option -E ***Specifies Magnetic Piston and Dovetail Mounting Slot(s)***
Strokes are NOT affected by magnetic piston.

– Sensors Must be Ordered Separately
See Sensor Models Available page 1.14

2 1/2" (521) Bore

Sensors available for "AA" & "TA" strokes and longer. Stroke AA is ported on opposite sides.

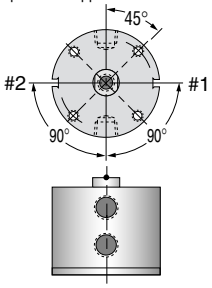

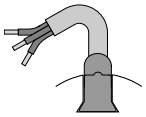

1/4" 60° Dovetail Profile of Sensor & Mounting Slot.

Quick Reference to Standard Strokes
Use the appropriate Stroke Letter in the Model Number

	Available on Original Series		*Available on "T" Series*	
	Stroke	Action X, XK	Stroke	Action X, XK
Sensor Slots at Positions #1 and # 2	1/4	AA	1/4	TA
	1/2	A	1/2	TB
	3/4	B	3/4	TC
	1	C		
Sensor Slot at Position #1 only	1 1/2	D	1 1/4	TD
	2	E	1 3/4	TE
	3	F	2 3/4	TF
	4	G	3 3/4	TG

Suffix Option -AS Adjustable Extend Stroke
Available on Original Series with Actions: -X, -XK, -O
Also see *Option Information* on page 1.11.

Stroke Inches		1/8	1/4	1/2	3/4	1	1-1/2	2	3	4
Stroke Letter		AB	AA	A	B	C	D	E	F	G
Actions: -X, -XK	BB	2.02	2.14	2.39	2.77	2.89	3.39	3.89	4.89	5.89
Actions:-O	BB	2.02	2.14	2.39	2.77	2.89	4.89	NA	NA	NA
	C	1.67	1.91	2.41	2.91	3.41	4.41	5.41	7.41	9.41
	D	0.63	0.75	1.00	1.25	1.50	2.00	2.50	3.50	4.50
	E	0.88	1.00	1.25	1.50	1.75	2.25	2.75	3.75	4.75

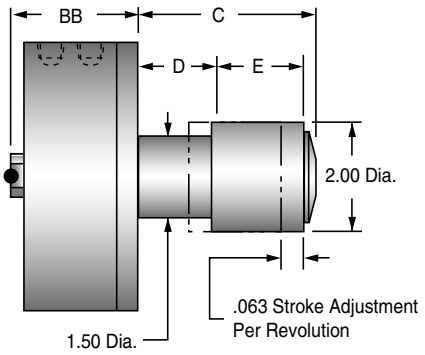

1

Action –XDR Original Series
Double Rod, Double Acting

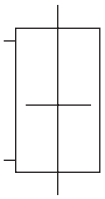

See page 1.16 for
Mounting Bolts
Force Area = 4.47
Seal Kit = 521-SK

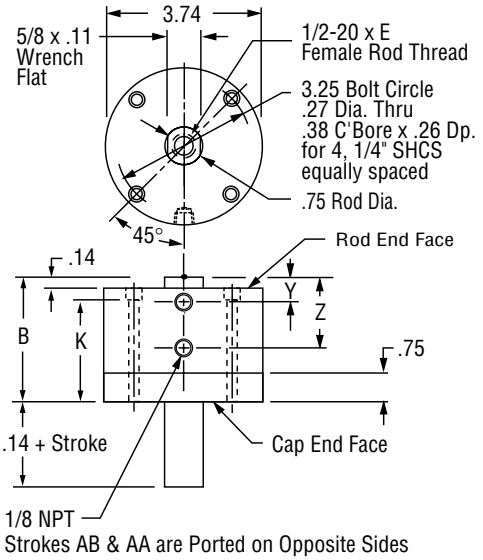

Stroke, Inches	1/8	1/4	1/2	3/4	1	1-1/2	2	3	4
Stroke, Letter	AB	AA	A	B	C	D	E	F	G
B	2.02	2.14	2.39	2.77	2.89	3.39	3.89	4.89	5.89
E	.56	.63	.63	.88	.88	.88	.88	.88	.88
K	1.63	1.75	2.00	2.38	2.50	3.00	3.50	4.50	5.50
Y	.52	.52	.52	.64	.64	.64	.64	.64	.64
Z	.89	1.02	1.27	1.64	1.77	2.27	2.77	3.77	4.77
Weight, lb.	2.20	2.29	2.48	2.82	2.83	3.28	3.67	4.60	5.40

Action –XDRK Original Series
Double Rod, Double Acting, Nonrotating

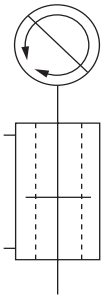

See page 1.16 for
Mounting Bolts
Force Area = 4.27
Seal Kit = 521-SK-K

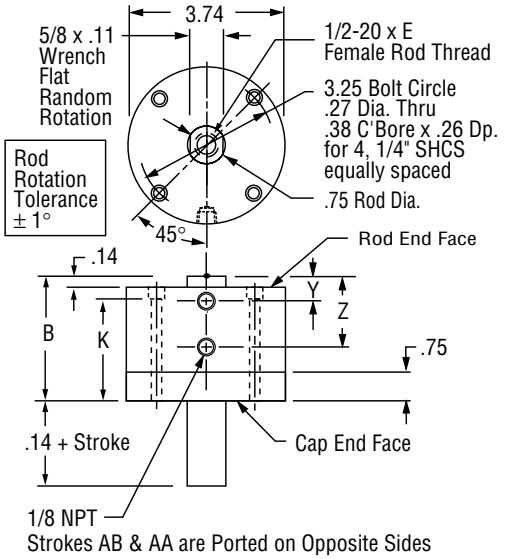

Stroke, Inches	1/8	1/4	1/2	3/4	1	1-1/2	2	3	4
Stroke, Letter	AB	AA	A	B	C	D	E	F	G
B	2.02	2.14	2.39	2.77	2.89	3.39	3.89	4.89	5.89
E	.56	.63	.63	.88	.88	.88	.88	.88	.88
K	1.63	1.75	2.00	2.38	2.50	3.00	3.50	4.50	5.50
Y	.52	.52	.52	.64	.64	.64	.64	.64	.64
Z	.89	1.02	1.27	1.64	1.77	2.27	2.77	3.77	4.77
Weight, lb.	2.34	2.43	2.63	2.97	2.99	3.45	3.85	4.79	5.62

Action –ODR Original Series
Double Rod, Single Acting, Spring Retracted

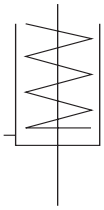

See page 1.16 for
Mounting Bolts
Force Area = 4.47
Seal Kit = 521-SK

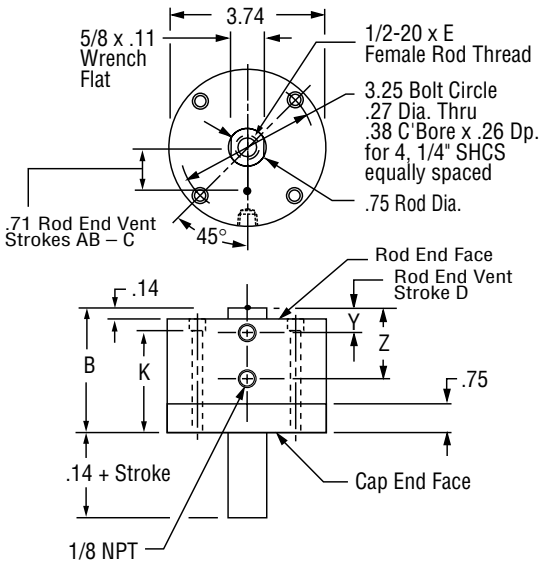

Stroke, Inches	1/8	1/4	1/2	3/4	1	1-1/2
Stroke, Letter	AB	AA	A	B	C	D
B	2.02	2.14	2.39	2.77	2.89	4.89
E	.56	.63	.63	.88	.88	.88
K	1.63	1.75	2.00	2.38	2.50	4.50
Y	Rod End Face Vent					.64
Z	.89	1.02	1.27	1.64	1.77	3.77
Weight, lb.	2.14	2.23	2.41	2.76	2.77	4.52
Spring Return Forces, lb.						
Preload	12.0	6.3	7.0	5.0	4.8	7.3
End of Stroke	18.0	18.0	20.0	15.5	20.0	20.0

Prefix Option -M Metric Cylinder & Rod Thread, 63.5mm Bore
Available on Original Series with Actions: -XDR, -XDRK, -ODR
Also see *Option Information* on page 1.7.

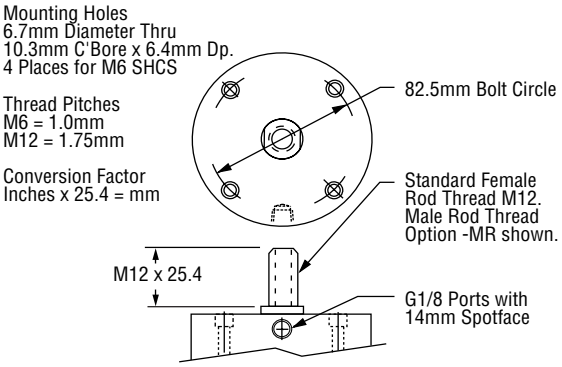

Stroke mm	3.2	6.4	12.7	19.1	25.4	38.1	50.8	76.2	101.6
Stroke Letter	AB	AA	A	B	C	D	E	F	G

The **Suffix Options** charted on the right are available on Original Series with the Actions indicated (✓). They require no dimensional changes from the Standard Specifications on page 1.51. – *Also see Option Information on pages 1.7 thru 1.15.*

	T	V	Q	H	N	C1–C7	LF	LR	LFR	BF	BR	BFR	P14	16	25
-XDR	✓	✓	✓	✓	✓	✓	✓	✓	✓	✓	✓	✓	✓	✓	✓
-XDRK	NA	✓	✓	✓	✓	✓	NA	✓	NA	✓	✓	✓	✓	✓	✓
-ODR	NA	✓	✓	✓	✓	NA	NA	✓	NA	NA	✓	NA	✓	✓	✓

Suffix Options -MR, -MR1, -MR2 Male Rod Thread

Available on Original Series with Actions -XDR, -XDRK, -ODR.

For Rod End only use **–MR**
For Cap End only use **–MR1**
For Both Ends use **–MR2**

Also see Option Information on Page 1.8.

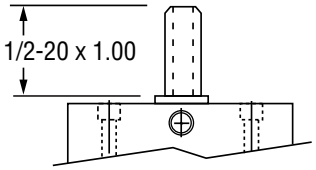

Suffix Option -E ***Specifies Magnetic Piston and Dovetail Mounting Slot(s)***
Strokes are NOT affected by magnetic piston.

– Sensors Must be Ordered Separately
See Sensor Models Available page 1.14

2 1/2" (521) Bore

Sensors available for "AA"strokes and longer.
Stroke AA is ported on opposite sides.

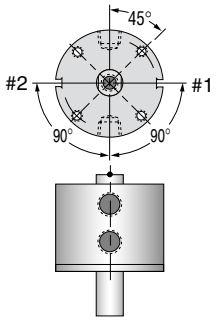

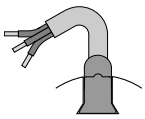

1/4" 60° Dovetail Profile of Sensor & Mounting Slot.

Quick Reference to Standard Strokes
Use the appropriate Stroke Letter in the Model Number

Available on Original Series

	Stroke	Action XDR, XDRK
Sensor Slots at Positions #1 and # 2	1/4	AA
	1/2	A
	3/4	B
	1	C
Sensor Slot at Position #1 only	1 1/2	D
	2	E
	3	F
	4	G

1

Model Number Code

Prefix Options	Stroke			Action	Suffix Options
Leave blank if none desired	C	–	721	– X	– MR

Metric	M
See pages 1.7, 1.55 & 1.58	

Bore	Code
3"	721
76.2mm	721

Standard Strokes

Original Series

Action	X XK XDR XDRK	O ODR	OP
Stroke			
1/8	AB	AB	AB
1/4	AA	AA	AA
1/2	A	A	A
3/4	B	B	B
1	C	C	C
1 1/2	D	D	–
2	E	–	–
3	F	–	–
4	G	–	–

"T" Series Includes PTFE piston bearing

Action	X XK	O	OP
Stroke			
1/4	TA	TA	TA
1/2	TB	TB	TB
3/4	TC	TC	TC
1 1/4	TD	TD	–
1 3/4	TE	–	–
2 3/4	TF	–	–
3 3/4	TG	–	–

Grey shading indicates sensors are not available.

Strokes are NOT affected by magnetic piston Option "E"

Action

Single rod

Double acting	-X
Double acting, Nonrotating Internal guide pins - 150 psi max	-XK
Single acting, spring retracted	-O
Single acting, spring extended	-OP

Double rod

Double acting	-XDR
Double acting, Nonrotating Internal guide pins - 150 psi max	-XDRK
Single acting, spring retracted	-ODR

See pages 1.5 & 1.6 for Action Information.
See pages 1.54 & 1.57 for Standard Specifications

HOW TO ORDER

1. Under ***Stroke*** – select letter(s) for desired Series and Stroke.
2. Under ***Bore*** – select **721** for 3" bore.

Seven Other Bore Sizes are Available

Bore	Bore Code	See page
1/2"	5	1.17
3/4"	7	1.23
1 1/8"	121	1.29
1 5/8"	221	1.35
2"	321	1.41
2 1/2"	521	1.47
4"	1221	1.59

3. Under ***Action*** – select letter(s) for desired action.
4. Under ***Prefix & Suffix Options***– select letter(s) for desired options and add to model number.

EXAMPLES

A-721-X
Original Series, 1/2" stroke - 3" Bore - Single Rod, Double Acting

TC-721-X-MR
"T" Series, 3/4" Stroke - 3" Bore - Single Rod, Double Acting - Male Rod Thread

Suffix Options

Male rod thread: Single rod	-MR
Double rod, rod end	-MR
Double rod, cap end	-MR1
Double rod, both ends	-MR2
PTFE seals	-T
Viton seals	-V
Quad seals	-Q
External guide, nonrotating for load guiding (See page 1.65)	-G
Hydraulic:	
Standard cover	-H
Thick cover	-HHC
Air service:	
Thick cover	-HC
1/4 NPT ports	-P14
Hole thru double rod shaft: 5/32" hole	-16
Plus size: 1/4" hole 150 psi max	-25
Finish: **ProCoat**™ (Electroless Nickel)	-N
Stroke collar: 1/4" -C2, 1/2" -C4, 3/4" -C6, 1/8" -C1, 3/8" -C3, 5/8" -C5, 7/8" -C7	
Sound limiters: Rod end	-LF
Cap end	-LR
Both ends	-LFR
Rubber Bumpers: Rod end	-BF
Cap end	-BR
Both ends	-BFR
Adjustable extend stroke (Full stroke adjustment is standard)	-AS
Adjustable retract stroke (Over 1" adjustment add desired length, e.g. -RS2)	-RS
Clevis mount: Ports in-line with slot	-PM
Ports 90° to slot	-SM
Magnetic piston & sensor mounting slot(s) Order sensors separately. See page 1.14. Stroke length determines number of mounting slots. See page 1.14, 1.56, 1.58	-E

See pages 1.3 – 1.15 for general option information and pages 1.55 , 1.56 & 1.58 for option specifications of 3" bore models.

A complete library of cylinder CAD drawings is available from your local Fabco-Air Distributor or from the Fabco-Air web site – http://www.fabco-air.com

Action –X
Double Acting

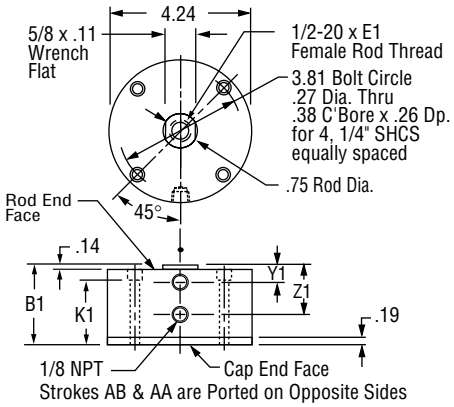

See page 1.16 for Mounting Bolts.
Push area = 7.07
Pull area = 6.63
Seal Kits for Series:
Original = 721-SK
"T" = 721-SKG

Action –XK
Double Acting
Nonrotating

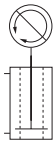

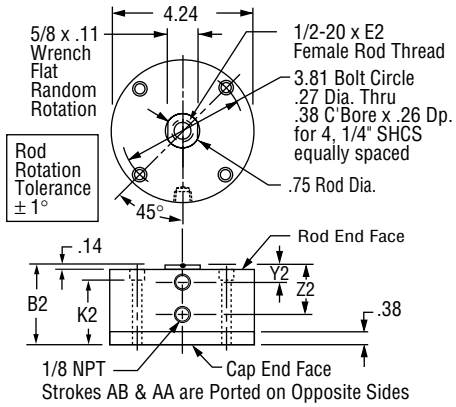

See page 1.16 for Mounting Bolts.
Push area = 6.87
Pull area = 6.43
Seal Kits for Series:
Original = 721-SK-K
"T" = 721-SKG-K

Original Series

Stroke, Inches	1/8	1/4	1/2	3/4	1	1 1/2	2	3	4
Stroke, Letter	AB	AA	A	B	C	D	E	F	G
	Action –X				**Double Acting**				
B1	1.52	1.64	1.89	2.14	2.39	2.89	3.39	4.39	5.39
E1	.63	.63	.63	.88	.88	.88	.88	.88	.88
K1	1.12	1.24	1.49	1.74	1.99	2.49	2.99	3.99	4.99
Y1	.52	.52	.52	.64	.64	.64	.64	.64	.64
Z1	.95	1.08	1.33	1.58	1.83	2.33	2.83	3.83	4.83
Weight, lb.	1.89	1.97	2.18	2.36	2.57	2.98	3.28	4.22	5.03
	Action –XK				**Double Acting, Nonrotating**				
B2	1.71	1.83	2.08	2.33	2.58	3.08	3.58	4.58	5.58
E2	.63	.63	.63	.88	.88	.88	.88	.88	.88
K2	1.31	1.43	1.68	1.93	2.18	2.68	3.18	4.18	5.18
Y2	.52	.52	.52	.64	.64	.64	.64	.64	.64
Z2	.95	1.08	1.33	1.58	1.83	2.33	2.83	3.83	4.83
Weight, lb.	2.15	2.24	2.45	2.64	2.86	3.28	3.59	4.56	5.40
	Action –O				**Single Acting, Spring Retracted**				
B3	1.52	1.64	1.89	2.14	2.39	4.39	NA*	NA*	NA*
E3	.63	.63	.63	.88	.88	.88	NA*	NA*	NA*
K3	1.12	1.24	1.49	1.74	1.99	3.99	NA*	NA*	NA*
Y3	Rod End Face Vent					.64	NA*	NA*	NA*
Z3	.95	1.08	1.33	1.58	1.83	3.83	NA*	NA*	NA
Weight,. lb.	1.20	1.92	2.11	2.29	2.51	4.36	NA*	NA*	NA*
Preload, lb.	12.0	12.0	6.5	5.0	4.7	7.3	NA*	NA*	NA*
End of Stroke, lb.	18.0	18.5	15.5	15.5	20.0	20.0	NA*	NA*	NA*
	Action –OP				**Single Acting, Spring Extended**				
B4	2.08	2.33	2.83	3.33	3.83	NA*	NA*	NA*	NA*
E4	.63	.63	.63	.88	.88	NA*	NA*	NA*	NA*
K4	1.55	1.68	1.93	2.18	2.43	NA*	NA*	NA*	NA*
Y4	.65	.77	1.02	1.39	1.64	NA*	NA*	NA*	NA*
Z4	1.08	1.33	1.83	2.33	2.83	NA*	NA*	NA*	NA*
Weight, lb.	2.49	2.60	2.69	2.99	3.20	NA*	NA*	NA*	NA*
Preload, lb.	6.2	12.0	6.5	5.0	5.2	NA*	NA*	NA*	NA*
End of Stroke, lb.	12.0	18.5	15.5	15.5	20.5	NA*	NA*	NA*	NA*

"T" Series

Stroke, Inches	1/4	1/2	3/4	1 1/4	1 3/4	2 3/4	3 3/4
Stroke, Letter	TA	TB	TC	TD	TE	TF	TG
	Action –X			**Double Acting**			
B1	1.89	2.14	2.39	2.89	3.39	4.39	5.39
E1	.63	.88	.88	.88	.88	.88	.88
K1	1.49	1.74	1.99	2.49	2.99	3.99	4.99
Y1	.52	.64	.64	.64	.64	.64	.64
Z1	1.33	1.58	1.83	2.33	2.83	3.83	4.83
Weight, lb.	2.49	2.68	2.89	3.30	3.70	4.54	5.40
	Action –XK			**Double Acting, Nonrotating**			
B2	2.08	2.33	2.58	3.08	3.58	4.58	5.58
E2	.63	.88	.88	.88	.88	.88	.88
K2	1.68	1.93	2.18	2.68	3.18	4.18	5.18
Y2	.52	.64	.64	.64	.64	.64	.64
Z2	1.33	1.58	1.83	2.33	2.83	3.83	4.83
Weight, lb.	2.77	2.96	3.18	3.60	3.91	4.88	5.72
	Action –O			**Single Acting, Spring Retracted**			
B3	1.89	2.14	2.39	4.39	NA*	NA*	NA*
E3	.63	.88	.88	.88	NA*	NA*	NA*
K3	1.49	1.74	1.99	3.99	NA*	NA*	NA*
Y3	Rod End Face Vent			.64	NA*	NA*	NA*
Z3	1.33	1.58	1.83	3.83	NA*	NA*	NA*
Weight,. lb.	2.43	2.61	2.83	4.68	NA*	NA*	NA*
Preload, lb.	11.7	10.6	7.9	9.5	NA*	NA*	NA*
End of Stroke, lb.	17.0	19.3	20.0	20.0	NA*	NA*	NA*
	Action –OP			**Single Acting, Spring Extended**			
B4	2.58	3.08	3.58	NA*	NA*	NA*	NA*
E4	.63	.88	.88	NA*	NA*	NA*	NA*
K4	1.93	2.18	2.43	NA*	NA*	NA*	NA*
Y4	.77	1.14	1.39	NA*	NA*	NA*	NA*
Z4	1.58	2.08	2.58	NA*	NA*	NA*	NA*
Weight, lb.	3.01	3.31	3.52	NA*	NA*	NA*	NA*
Preload, lb.	11.7	10.6	8.5	NA*	NA*	NA*	NA*
End of Stroke, lb.	17.1	19.3	20.8	NA*	NA*	NA*	NA*

Action –O
Single Acting
Spring Retracted

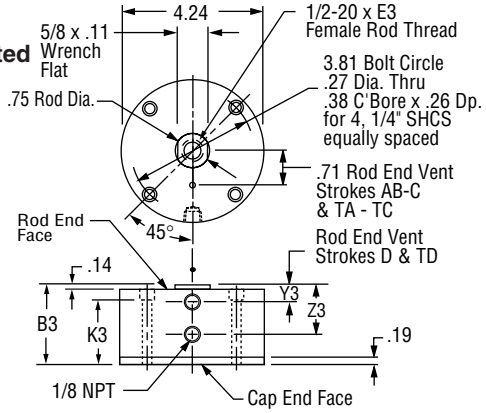

See page 1.16 for Mounting Bolts.
Push area = 7.07
See Chart for Spring Forces: Preload & End of Stroke
Seal Kits for Series:
Original = 721-SK
"T" = 721-SKG

Action –OP
Single Acting
Spring Extended

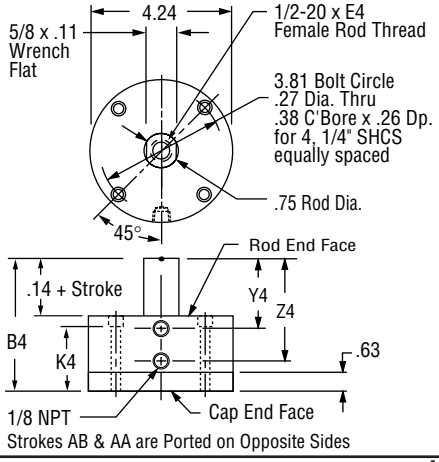

See page 1.16 for Mounting Bolts.
Pull area = 6.63
See Chart for Spring Forces: Preload & End of Stroke
Seal Kits for Series:
Original = 721-SK
"T" = 721-SKG

NA* = Not Available

1

Prefix Option -M Metric Cylinder & Rod Thread 76.2mm Bore
Available on Original and "T" Series with Actions: -X, -XK, -O, -OP
Also see *Option Information* on page 1.7.

Original Series									
Stroke mm	3.2	6.4	12.7	19.1	25.4	38.1	50.8	76.2	101.6
Stroke Letter	AB	AA	A	B	C	D	E	F	G

"T" Series							
Stroke mm	6.4	12.7	19.1	31.8	44.5	69.9	95.3
Stroke Letter	TA	TB	TC	TD	TE	TF	TG

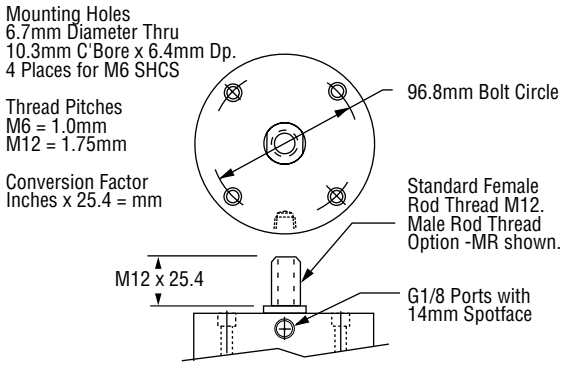

The **Suffix Options** charted on the right are available on Original and "T" Series with the Actions indicated (✓). They require no dimensional changes from the Standard Specifications on page 1.54.
– Also see Option Information on pages 1.7 thru 1.15.

	T	V	Q	H	N	C1–C7	LF	LR	LFR	BF	BR	BFR	P14
-X	✓	✓	✓	✓	✓	✓	✓	✓	✓	✓	✓	✓	✓
-XK	NA	✓	✓	✓	✓	✓	NA	✓	NA	✓	✓	✓	✓
-O	NA	✓	✓	✓	✓	NA	NA	✓	NA	NA	✓	NA	✓
-OP	NA	✓	✓	✓	✓	✓	✓	✓	✓	✓	NA	NA	✓

Suffix Options -PM & -SM Clevis Mount
Available on Original and "T" Series
with Actions: -X, -XK, -O, -OP
Also see *Option Information* on page 1.13.

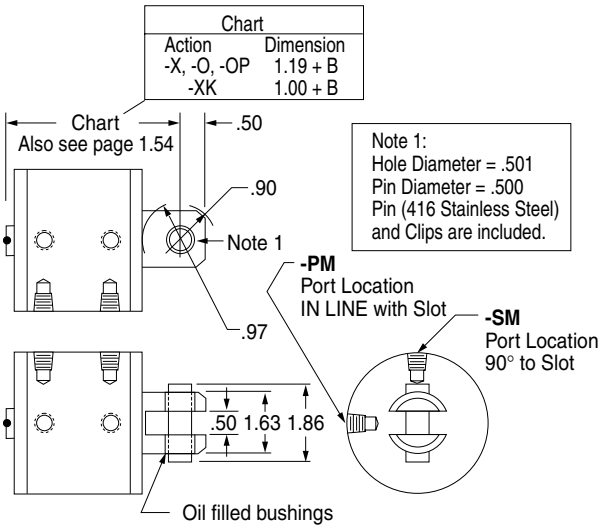

EM-521 Eye Bracket Kit
Mates with Clevis Mount shown on the left.
Order separately.

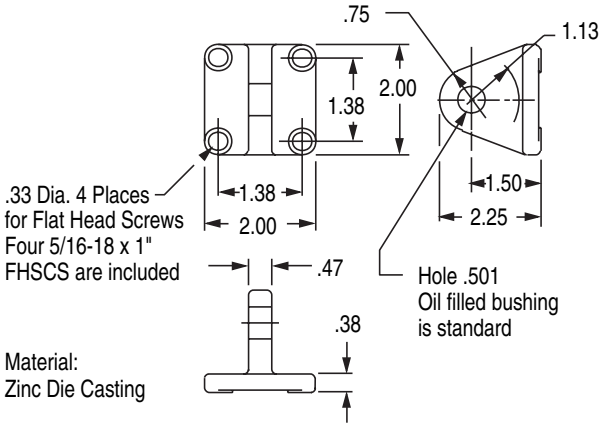

RC-56 Rod Clevis and Pin
Threaded Stud mates with Female Rod thread
in the ***Pancake®*** Cylinders.
Slot and Pin Mate with EM-121 Eye Bracket
shown on the right.

Materials:
Clevis – Steel, Black Oxide
Stud – Steel
Pin – 416 Stainless Steel
Pin & Clips are included

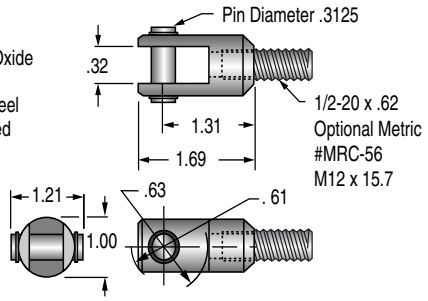

EM-121 Eye Bracket Kit
Mates with RC-56 Rod Clevis shown on the left.
Order separately.

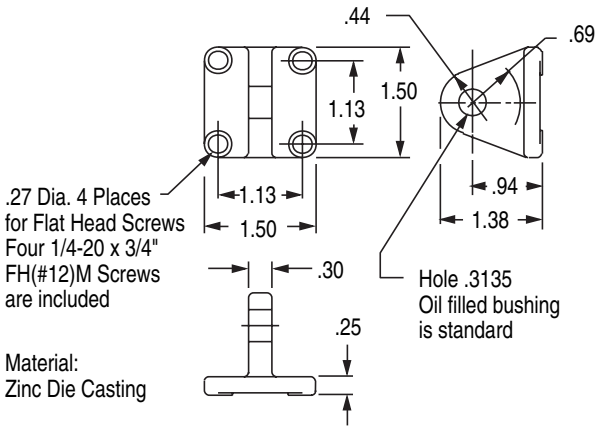

Suffix Option -HHC Hydraulic & -HC Air
Available on Original and "T" Series with Action -X, -O.

Also see *Option Information* on page 1.9 for Pressure and Mounting details.

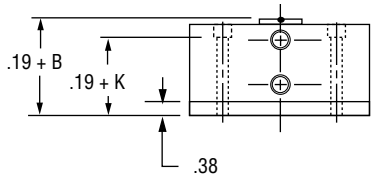

Suffix Option -MR Male Rod Thread
Available on Original and "T" Series with Actions: -X, -XK, -O, -OP.
Also see *Option Information* on page 1.8.

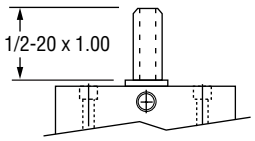

Suffix Option -RS Adjustable Retract Stroke
Available on Original and "T" Series with Actions: -X, -XK, -O, -OP
Also see *Option Information* on page 1.11.

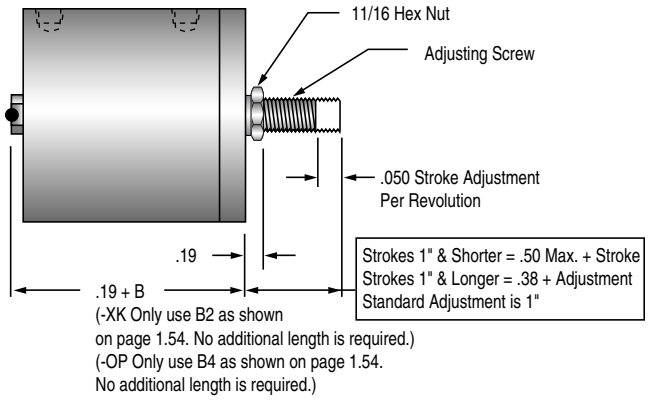

Suffix Option -E ***Specifies Magnetic Piston and Dovetail Mounting Slot(s)***
Strokes are NOT affected by magnetic piston.

– Sensors Must be Ordered Separately
See Sensor Models Available page 1.14

3" (721) Bore

Sensors available for "AA" & "TA" strokes and longer. Stroke AA is ported on opposite sides.

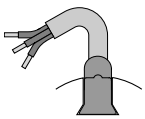

1/4" 60° Dovetail Profile of Sensor & Mounting Slot.

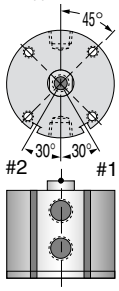

Quick Reference to Standard Strokes
Use the appropriate Stroke Letter in the Model Number

	Available on Original Series		Available on "T" Series	
	Stroke	Action X, XK	Stroke	Action X, XK
Sensor Slots at Positions #1 and # 2	1/4	AA	1/4	TA
	1/2	A	1/2	TB
	3/4	B	3/4	TC
	1	C		
Sensor Slot at Position #1 only	1 1/2	D	1 1/4	TD
	2	E	1 3/4	TE
	3	F	2 3/4	TF
	4	G	3 3/4	TG

Suffix Option -AS Adjustable Extend Stroke
Available on Original Series with Actions: -X, -XK, -O
Also see *Option Information* on page 1.11.

Stroke Inches		1/8	1/4	1/2	3/4	1	1-1/2	2	3	4
Stroke Letter		AB	AA	A	B	C	D	E	F	G
Actions: -X, -XK	BB	2.08	2.20	2.45	2.70	2.95	3.45	3.95	4.95	5.95
Actions:-O	BB	2.08	2.20	2.45	2.70	2.95	4.95	NA	NA	NA
	C	1.67	1.91	2.41	2.91	3.41	4.41	5.41	7.41	9.41
	D	0.63	0.75	1.00	1.25	1.50	2.00	2.50	3.50	4.50
	E	0.88	1.00	1.25	1.50	1.75	2.25	2.75	3.75	4.75

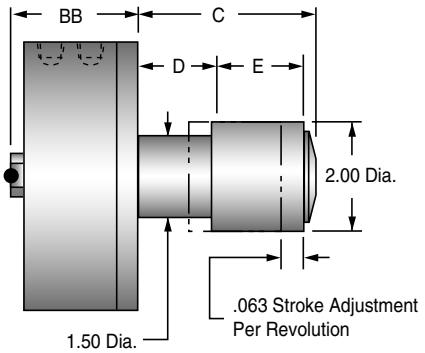

1

Action –XDR Original Series
Double Rod, Double Acting

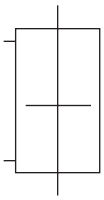

See page 1.16 for
Mounting Bolts
Force Area = 6.63
Seal Kit = 721-SK

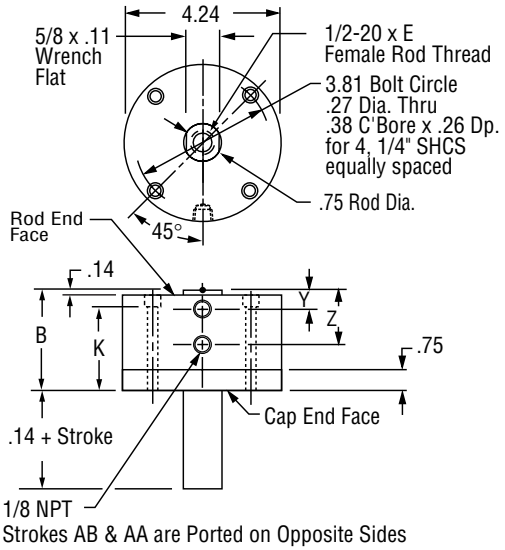

Strokes AB & AA are Ported on Opposite Sides

Stroke, Inches	1/8	1/4	1/2	3/4	1	1-1/2	2	3	4
Stroke, Letter	AB	AA	A	B	C	D	E	F	G
B	2.08	2.20	2.45	2.70	2.95	3.45	3.95	4.95	5.95
E	.63	.63	.63	.88	.88	.88	.88	.88	.88
K	1.68	1.80	2.10	2.30	2.55	3.10	3.55	4.55	5.55
Y	.52	.52	.52	.64	.64	.64	.64	.64	.64
Z	.95	1.08	1.33	1.58	1.83	2.33	2.83	3.83	4.83
Weight, lb.	2.84	2.95	3.16	3.39	3.61	4.09	4.53	5.50	6.47

Action –XDRK Original Series
Double Rod, Double Acting, Nonrotating

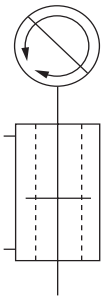

See page 1.16 for
Mounting Bolts
Force Area = 6.43
Seal Kit = 721-SK-K

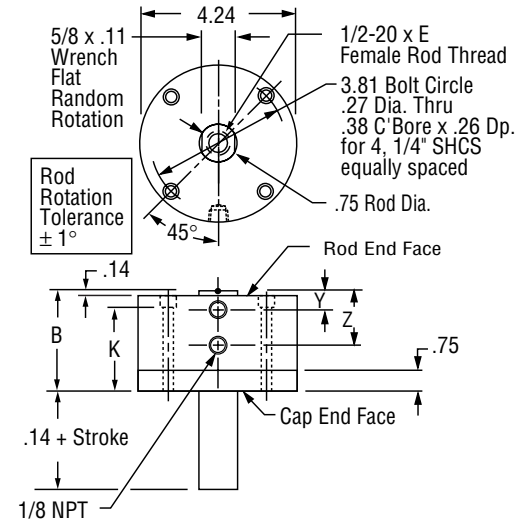

Strokes AB & AA are Ported on Opposite Sides

Stroke, Inches	1/8	1/4	1/2	3/4	1	1-1/2	2	3	4
Stroke, Letter	AB	AA	A	B	C	D	E	F	G
B	2.08	2.20	2.45	2.70	2.95	3.45	3.95	4.95	5.95
E	.63	.63	.63	.88	.88	.88	.88	.88	.88
K	1.68	1.80	2.10	2.30	2.55	3.10	3.55	4.55	5.55
Y	.52	.52	.52	.64	.64	.64	.64	.64	.64
Z	.95	1.08	1.33	1.58	1.83	2.33	2.83	3.83	4.83
Weight, lb.	3.10	3.21	3.43	3.67	3.90	4.39	4.84	5.84	6.84

Action –ODR Original Series
Double Rod, Single Acting, Spring Retracted

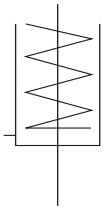

See page 1.16 for
Mounting Bolts
Force Area = 6.63
Seal Kit = 721-SK

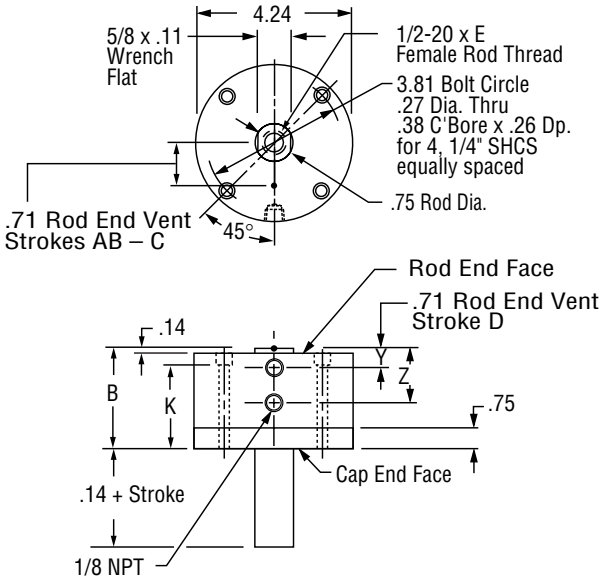

Stroke, Inches	1/8	1/4	1/2	3/4	1	1-1/2
Stroke, Letter	AB	AA	A	B	C	D
B	2.08	2.20	2.45	2.70	2.95	4.95
E	.63	.63	.63	.88	.88	.88
K	1.68	1.80	2.10	2.30	2.55	4.55
Y	Rod End Face Vent					.64
Z	.95	1.08	1.33	1.58	1.83	3.83
Weight, lb.	2.77	2.88	3.10	3.31	3.54	5.64
Spring Return Forces, lb.						
Preload	12.0	12.0	6.5	5.0	4.7	7.3
End of Stroke	18.0	18.5	15.5	15.5	20.0	20.0

Prefix Option -M Metric Cylinder & Rod Thread, 76.2mm Bore
Available on Original Series with Actions: -XDR, -XDRK, -ODR
Also see *Option Information* on page 1.7.

Stroke mm	3.2	6.4	12.7	19.1	25.4	38.1	50.8	76.2	101.6
Stroke Letter	AB	AA	A	B	C	D	E	F	G

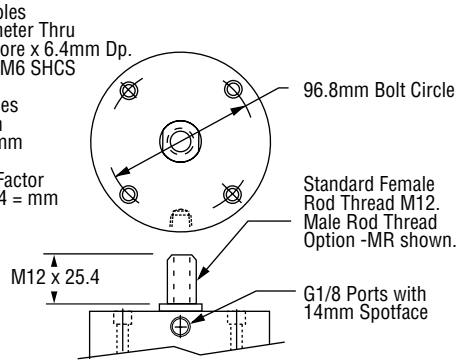

The **Suffix Options** charted on the right are available on Original Series with the Actions indicated (✓). They require no dimensional changes from the Standard Specifications on page 1.57. – *Also see Option Information on pages 1.7 thru 1.15.*

	T	V	Q	H	N	C1–C7	LF	LR	LFR	BF	BR	BFR	P14	16	25
-XDR	✓	✓	✓	✓	✓	✓	✓	✓	✓	✓	✓	✓	✓	✓	✓
-XDRK	NA	✓	✓	✓	✓	✓	NA	✓	NA	✓	✓	✓	✓	✓	✓
-ODR	NA	✓	✓	✓	✓	NA	NA	✓	NA	NA	✓	NA	✓	✓	✓

Suffix Options -MR, -MR1, -MR2 Male Rod Thread

Available on Original Series with Actions -XDR, -XDRK, -ODR.

For Rod End only use –MR
For Cap End only use –MR1
For Both Ends –MR2

Also see Option Information on Page 1.8

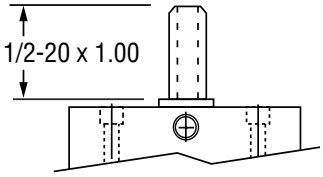

Suffix Option -E ***Specifies Magnetic Piston and Dovetail Mounting Slot(s)***
Strokes are NOT affected by magnetic piston.

– Sensors Must be Ordered Separately
See Sensor Models Available page 1.14

3" (721) Bore

Sensors available for "AA"strokes and longer.
Stroke AA is ported on opposite sides.

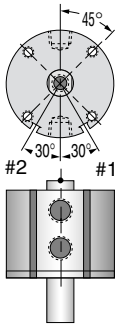

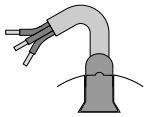

1/4" 60° Dovetail Profile of Sensor & Mounting Slot.

Quick Reference to Standard Strokes
Use the appropriate Stroke Letter in the Model Number

Available on Original Series

	Stroke	Action XDR, XDRK
Sensor Slots at Positions #1 and # 2	1/4	AA
	1/2	A
	3/4	B
	1	C
Sensor Slot at Position #1 only	1 1/2	D
	2	E
	3	F
	4	G

1

Model Number Code

Prefix Options	Stroke		Bore		Action		Suffix Options
Leave blank if none desired	D	–	1221	–	X	–	MR

Metric	M
See pages 1.7, 1.61 & 1.64	

Bore	Code
4"	1221
101.6mm	1221

Standard Strokes

Original Series

Action	X XK XDR XDRK
Stroke	
1/8	AC
1/4	AB
1/2	AA
1	A
1 1/2	B
2	C
3	D
4	E

"T" Series Includes PTFE piston bearing

Action	X XK
Stroke	
5/16	TAA
13/16	TA
1 5/16	TB
1 13/16	TC
2 13/16	TD
3 13/16	TE

Grey shading indicates sensors are not available.

Strokes are NOT affected by magnetic piston Option "E"

Action

Single rod

Double acting	**-X**
Double acting, Nonrotating Internal guide pins - 150 psi max	**-XK**

Double rod

Double acting	**-XDR**
Double acting, Nonrotating Internal guide pins - 150 psi max	**-XDRK**

See pages 1.5 & 1.6 for Action Information.
See pages 1.60 & 1.63 for Standard Specifications

HOW TO ORDER

1. Under ***Stroke*** – select letter(s) for desired Series and Stroke.
2. Under ***Bore*** – select **1221** for 4" bore.
   Seven Other Bore Sizes are Available

Bore	Bore Code	See page
1/2"	5	1.17
3/4"	7	1.23
1 1/8"	121	1.29
1 5/8"	221	1.35
2"	321	1.41
2 1/2"	521	1.47
3"	721	1.53

3. Under ***Action*** – select letter(s) for desired action.
4. Under ***Prefix & Suffix Options***– select letter(s) for desired options and add to model number.

EXAMPLES

D-1221-X
Original Series, 3" stroke - 4" Bore - Single Rod, Double Acting

TD-1221-X-MR
"T" Series, 2 13/16" Stroke - 4" Bore - Single Rod, Double Acting - Male Rod Thread

Suffix Options

Male rod thread: Single rod			**-MR**
Double rod, rod end			**-MR**
Double rod, cap end			**-MR1**
Double rod, both ends			**-MR2**
PTFE seals			**-T**
Viton seals			**-V**
Quad seals			**-Q**
External guide, nonrotating for load guiding (See page 1.65)			**-G**
Hydraulic: Standard cover			**-H**
Hydraulic: Thick cover			**-HHC**
Air service: Thick cover			**-HC**
1/4 NPT ports			**-P14**
Hole thru double rod shaft: 1/4" hole 150 psi max			**-25**
Finish: **ProCoat**™ (Electroless Nickel)			**-N**
Stroke collar:	1/4" **-C2**	1/8"	**-C1**
	1/2" **-C4**	3/8"	**-C3**
	3/4" **-C6**	5/8"	**-C5**
		7/8"	**-C7**
Sound limiters:	Rod end		**-LF**
	Cap end		**-LR**
	Both ends		**-LFR**
Rubber Bumpers:	Rod end		**-BF**
	Cap end		**-BR**
	Both ends		**-BFR**
Adjustable extend stroke (Full stroke adjustment is standard)			**-AS**
Adjustable retract stroke (Over 1" adjustment add desired length, e.g. -RS2)			**-RS**
Clevis mount:	Ports in-line with slot		**-PM**
	Ports 90° to slot		**-SM**
Magnetic piston & sensor mounting slot(s) Order sensors separately. See page 1.14. Stroke length determines number of mounting slots. See page 1.14, 1.62, 1.64			**-E**

See pages 1.3 – 1.15 for general option information and pages 1.61, 1.62 & 1.64 for option specifications of 4" bore models.

A complete library of cylinder CAD drawings is available from your local Fabco-Air Distributor or from the Fabco-Air web site – http://www.fabco-air.com

Action –X
Double Acting

See page 1.16 for Mounting Bolts.
Push area = 12.57
Pull area = 11.97
Seal Kits for Series:
Original = 1221-SK
"T" = 1221-SKG

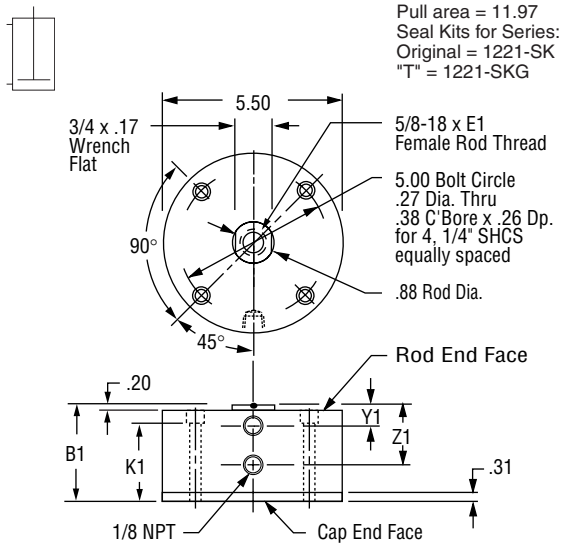

Action –XK
Double Acting
Nonrotating

See page 1.16 for Mounting Bolts.
Push area = 12.47
Pull area = 11.87
Seal Kits for Series:
Original = 1221-SK-K
"T" = 1221-SKG-K

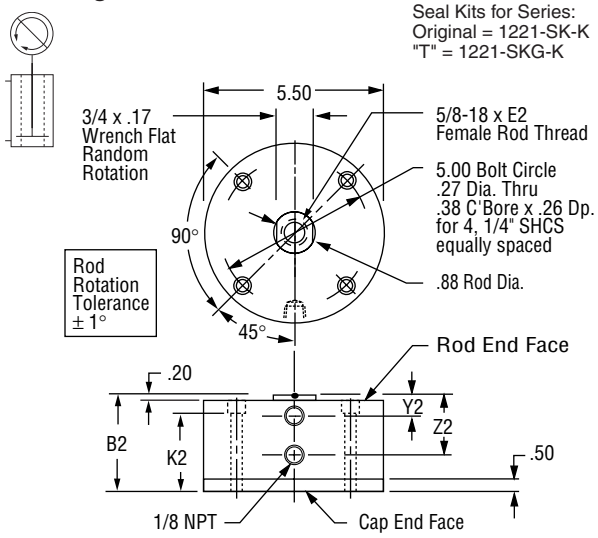

	Original Series								"T" Series					
Stroke, Inches	1/8	1/4	1/2	1	1 1/2	2	3	4	5/16	13/16	1 5/16	1 13/16	2 13/16	3 13/16
Stroke, Letter	AC	AB	AA	A	B	C	D	E	TAA	TA	TB	TC	TD	TE
	Action –X Double Acting								**Action –X Double Acting**					
B1	1.89	2.02	2.27	2.77	3.27	3.77	4.77	5.77	2.27	2.77	3.27	3.77	4.77	5.77
E1	.50	.50	.75	.88	.88	.88	.88	.88	.75	.88	.88	.88	.88	.88
K1	1.43	1.56	1.81	2.31	2.81	3.31	4.31	5.31	1.81	2.31	2.81	3.31	4.31	5.31
Y1	.58	.58	.70	.70	.70	.70	.70	.70	.70	.70	.70	.70	.70	.70
Z1	1.20	1.33	1.58	2.08	2.58	3.08	4.08	5.08	1.58	2.08	2.58	3.08	4.08	5.08
Weight, lb.	3.88	4.01	4.34	4.91	5.63	6.22	7.53	8.84	5.04	5.61	6.33	6.92	8.23	9.54
	Action –XK Double Acting, Nonrotating								**Action –XK Double Acting, Nonrotating**					
B2	2.08	2.21	2.46	2.96	3.46	3.96	4.96	5.96	2.46	2.96	3.46	3.96	4.96	5.96
E2	.50	.50	.75	.88	.88	.88	.88	.88	.75	.88	.88	.88	.88	.88
K2	1.62	1.75	2.00	2.50	3.00	3.50	4.50	5.50	2.00	2.50	3.00	3.50	4.50	5.50
Y2	.58	.58	.70	.70	.70	.70	.70	.70	.70	.70	.70	.70	.70	.70
Z2	1.20	1.33	1.58	2.08	2.58	3.08	4.08	5.08	1.58	2.08	2.58	3.08	4.08	5.08
Weight, lb.	4.31	4.44	4.78	5.36	6.10	6.70	8.04	9.38	5.48	6.06	6.80	7.50	8.74	10.08

1

Prefix Option -M Metric Cylinder & Rod Thread 101.6mm Bore
Available on Original and "T" Series with Actions: -X, -XK
Also see *Option Information* on page 1.7.

Original Series								
Stroke mm	3.2	6.4	12.7	25.4	38.1	50.8	76.2	101.6
Stroke Letter	AC	AB	AA	A	B	C	D	E

"T" Series						
Stroke mm	7.9	20.6	33.3	46.0	71.4	96.7
Stroke Letter	TAA	TA	TB	TC	TD	TE

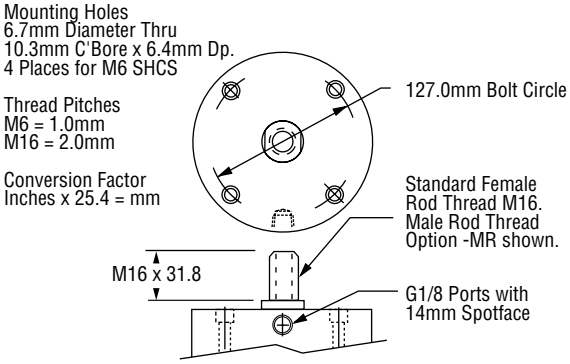

The **Suffix Options** charted on the right are available on Original and "T" Series with the Actions indicated (✓). They require no dimensional changes from the Standard Specifications on page 1.60.
– Also see Option Information on pages 1.7 thru 1.15.

	T	V	Q	H	N	C1–C7	LF	LR	LFR	BF	BR	BFR	P14
-X	✓	✓	✓	✓	✓	✓	✓	✓	✓	✓	✓	✓	✓
-XK	NA	✓	✓	✓	✓	✓	✓	✓	✓	✓	✓	✓	✓

Suffix Options -PM & -SM Clevis Mount
Available on Original and "T" Series
with Actions: -X, -XK
Also see *Option Information* on page 1.13.

Note 1:
Hole Diameter = .626
Pin Diameter = .625
Pin (416 Stainless Steel)
and Clips are included.

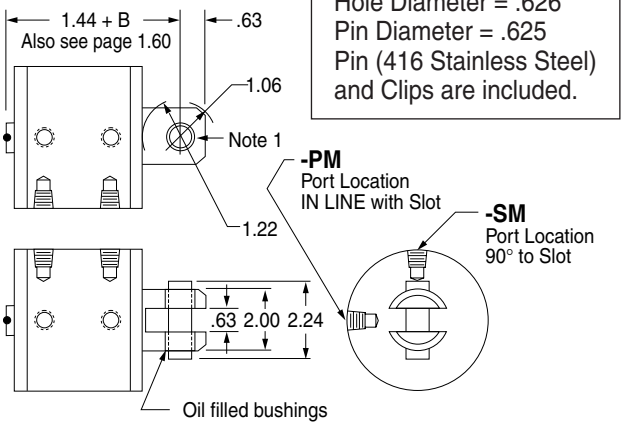

EM-1221 Eye Bracket Kit
Mates with Clevis Mount shown on the left.
Order separately.

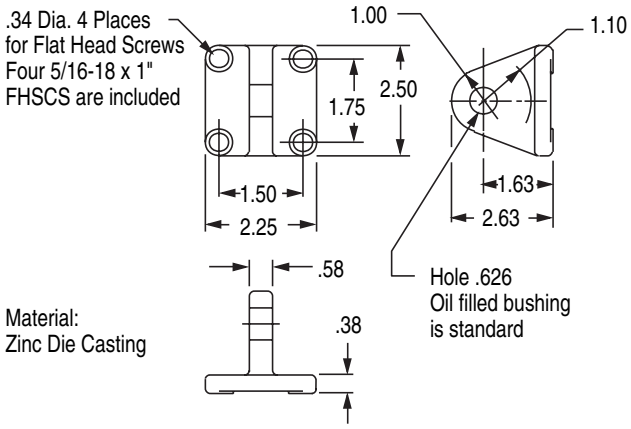

RC-63 Rod Clevis and Pin
Threaded Stud mates with Female Rod thread
in the ***Pancake®*** Cylinders.
Slot and Pin Mate with EM-521 Eye Bracket
shown on the right.

Materials:
Clevis – Steel, Black Oxide
Stud – Steel
Pin – 416 StainlessSteel
Pin & Clips are included

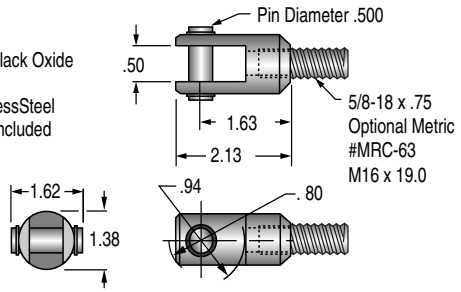

EM-521 Eye Bracket Kit
Mates with RC-63 Rod Clevis shown on the left.
Order separately.

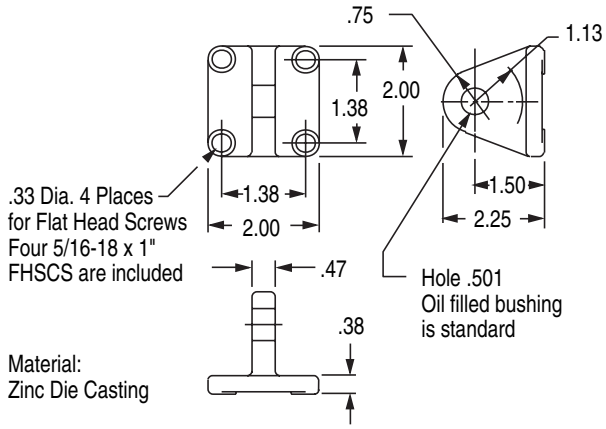

Suffix Option -MR **Male Rod Thread**
Available on Original and "T" Series with Actions: -X, -XK
Also see *Option Information* on page 1.8.

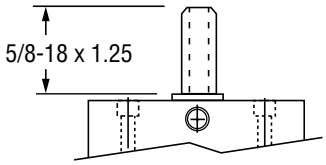

Suffix Option -RS **Adjustable Retract Stroke**
Available on Original and "T" Series with Actions: -X, -XK
Also see *Option Information* on page 1.11.

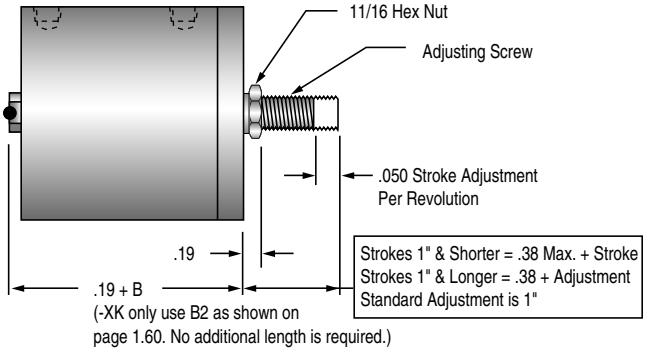

Suffix Option -HHC **Hydraulic & -HC Air**
Available on Original and "T" Series with Action -X.
Also see *Option Information* on page 1.9.

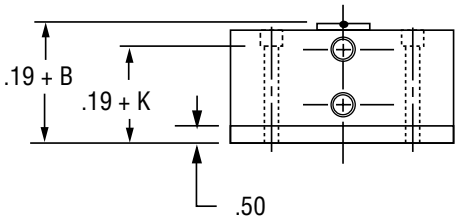

Suffix Option -E ***Specifies Magnetic Piston and Dovetail Mounting Slot(s)***
Strokes are NOT affected by magnetic piston.

– Sensors Must be Ordered Separately
See Sensor Models Available page 1.14

4" (1221) Bore

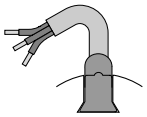

1/4" 60° Dovetail Profile of Sensor & Mounting Slot.

Sensors available for "AB" & "TAA" strokes and longer.

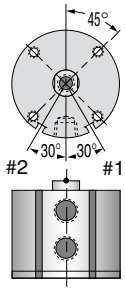

Quick Reference to Standard Strokes
Use the appropriate Stroke Letter in the Model Number

	Available on Original Series		*Available on "T" Series*	
	Stroke	**Action X, XK**	**Stroke**	**Action X, XK**
Sensor Slots at Positions #1 and # 2	1/4	AB	5/16	TAA
	1/2	AA	13/16	TA
	1	A		
Sensor Slot at Position #1 only	1-1/2	B	15/16	TB
	2	C	1-13/16	TC
	3	D	2-13/16	TD
	4	E	3-13/16	TE

Suffix Option -AS **Adjustable Extend Stroke**
Available on Original Series with Actions: -X, -XK
Also see *Option Information* on page 1.11.

Stroke Inches	1/8	1/4	1/2	1	1-1/2	2	3	4
Stroke Letter	AC	AB	AA	A	B	C	D	E
BB	2.33	2.45	2.70	3.20	3.70	4.20	5.20	6.20
C	1.66	1.91	2.41	3.41	4.41	5.41	7.41	9.41
D	0.63	.75	1.00	1.50	2.00	2.50	3.50	4.50
E	0.88	1.00	1.25	1.75	2.25	2.75	3.75	4.75

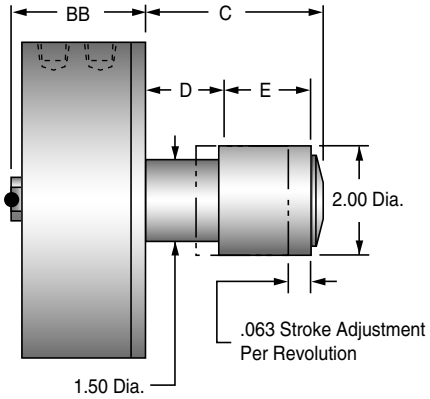

1

Action –XDR Original Series
Double Rod, Double Acting

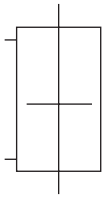

See page 1.16 for
Mounting Bolts.
Force area = 11.97
Seal Kit = 1221-SK

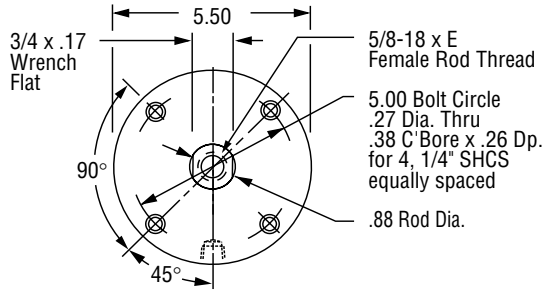

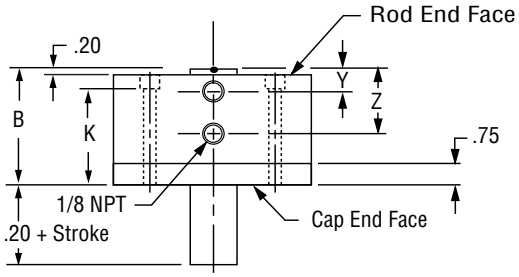

Stroke, Inches	1/8	1/4	1/2	1	1 1/2	2	3	4
Stroke, Letter	AC	AB	AA	A	B	C	D	E
B	2.33	2.45	2.70	3.20	3.70	4.20	5.20	6.20
E	.50	.50	.75	.88	.88	.88	.88	.88
K	1.87	2.00	2.25	2.75	3.25	3.75	4.75	5.75
Y	.58	.58	.70	.70	.70	.70	.70	.70
Z	1.20	1.33	1.58	2.08	2.58	3.08	4.08	5.08
Weight, lb.	5.22	5.38	5.75	6.44	7.16	7.72	9.19	10.31

Action –XDRK Original Series
Double Rod, Double Acting, Nonrotating

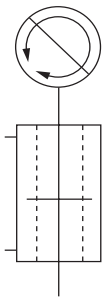

See page 1.16 for
Mounting Bolts.
Force area = 11.87
Seal Kit = 1221-SK-K

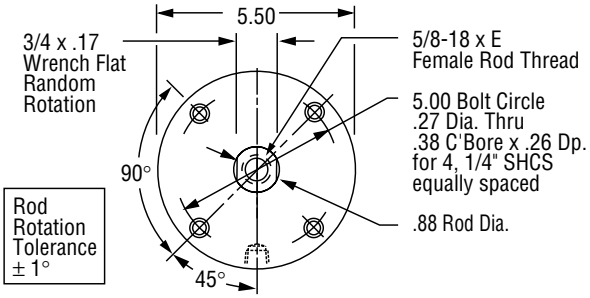

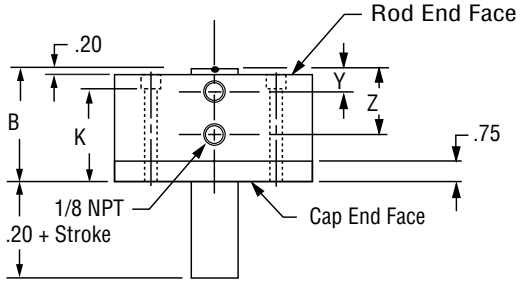

Stroke, Inches	1/8	1/4	1/2	1	1 1/2	2	3	4
Stroke, Letter	AC	AB	AA	A	B	C	D	E
B	2.33	2.45	2.70	3.20	3.70	4.20	5.20	6.20
E	.50	.50	.75	.88	.88	.88	.88	.88
K	1.87	2.00	2.25	2.75	3.25	3.75	4.75	5.75
Y	.58	.58	.70	.70	.70	.70	.70	.70
Z	1.20	1.33	1.58	2.08	2.58	3.08	4.08	5.08
Weight, lb.	5.65	5.81	6.19	6.89	7.63	8.23	9.70	10.85

Prefix Option M
Metric Cylinder & Rod Thread
101.6mm Bore

Available on Original Series with Actions -XDR, -XDRK.
Also see Option Information on Page 1.7

Mounting Holes
6.7mm Diameter Thru
10.3mm C'Bore x 6.4mm Dp.
4 Places for M6 SHCS

Thread Pitches
M6 = 1.0mm
M16 = 2.0mm

Conversion Factor
Inches x 25.4 = mm

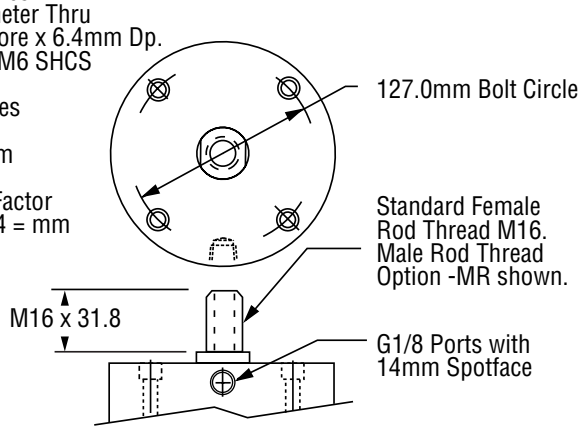

Stroke mm	3.2	6.4	12.7	25.4	38.1	50.8	76.2	101.6
Stroke Letter	AC	AB	AA	A	B	C	D	E

The **Suffix Options** charted on the right are available on Original Series with the Actions indicated (✓). They require no dimensional changes from the Standard Specifications on page 1.63. – *Also see Option Information on pages 1.7 thru 1.15.*

	T	V	Q	H	N	C1–C7	LF	LR	LFR	BF	BR	BFR	P14	25
-XDR	✓	✓	✓	✓	✓	✓	✓	✓	✓	✓	✓	✓	✓	✓
-XDRK	NA	✓	✓	✓	✓	✓	✓	✓	✓	✓	✓	✓	✓	✓

Suffix Options -MR, -MR1, -MR2 Male Rod Thread

Available on Original Series with Actions -XDR, -XDRK.

For Rod End only use **–MR**
For Cap End only use **–MR1**
For Both Ends use **–MR2**

Also see Option Information on Page 1.8

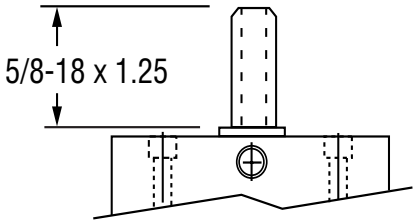

Suffix Option -E ***Specifies Magnetic Piston and Dovetail Mounting Slot(s)***
Strokes are NOT affected by magnetic piston.

– Sensors Must be Ordered Separately
See Sensor Models Available page 1.14

4" (1221) Bore

Sensors available for "AB"strokes and longer.

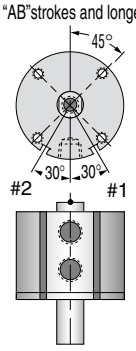

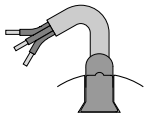

1/4" 60° Dovetail Profile of Sensor & Mounting Slot.

Quick Reference to Standard Strokes
Use the appropriate Stroke Letter in the Model Number

Available on Original Series

	Stroke	Action XDR, XDRK
Sensor Slots at Positions #1 and # 2	1/4	AB
	1/2	AA
	1	A
Sensor Slot at Position #1 only	1 1/2	B
	2	C
	3	D
	4	E

1

External Guide Pins Provide Load Guiding

External guide pins, adapted to the ***Pancake®*** cylinder line provide a superior nonrotating piston rod feature for applications such as package placement, figure stamping, and any application where anti-rotation and registration are critical as the piston is extended and retracted.

A mounting block is bolted to the piston rod. This block has two square pins mounted to it which in turn pass through guide blocks mounted on the sides of the cylinder.

Square guide pins are hard chrome plated steel for long wear and corrosion resistance.

Guide blocks are hard anodized aluminum for long wear and corrosion resistance.

Clearance in guide block mounting holes provide for adjustment and backlash control, compensation for wear, and minimal rotation.

Extended distance between guides provides superior nonrotation and support.

Extended piston rod provides clearance between cylinder and guide bar mounting block to eliminate pinch points.

Model G-221-X-G Shown

Available on *Pancake®* cylinders:
Original and "T" Series

Bores: 3/4" (7), 1 1/8" (121), 1 5/8" (221), 2" (321), 2 1/2" (521), 3" (721), and 4" (1221)

Strokes: 1/8" through 4"

Actions: –X, –XDR

In combination with Options:
Suffix;
-T, -V, -Q, -H, HHC, -HC,-P14, -N, -C1 — -C7, -AS, -RS, -LF, -LR, -LFR, -BF, -BR, -BFR, -E

Also available in Square 1® cylinders:
Bores 3/4" through 2"
Strokes 1/8" through 6"
See page 2.14 of this catalog.

HOW TO ORDER

Select the basic ***Pancake®*** Cylinder model number for your desired series, bore and stroke. Then **add -G as a Suffix Option.**

Please Note!!
This option affects the rod end dimensions
See details on page 1.66.

For dimensions B and all other dimensions not noted, please refer back to the main dimension table associated with your cylinder model and option selections.
Use the CAD library of ***Pancake®*** cylinders with your CAD program to reduce design time.

3/4" through 2" Bores

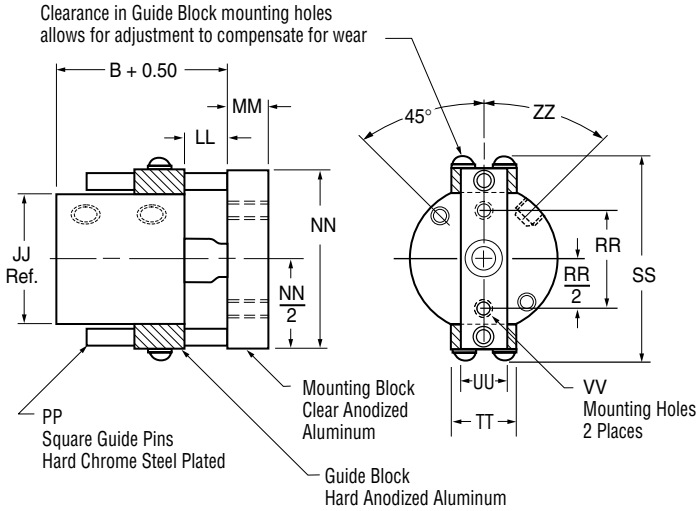

Model	7	121	221	321
Bore	3/4"	1 1/8"	1 5/8"	2"
JJ	1.50	1.99	2.74	3.24
LL	0.63	0.64	0.64	0.64
MM	0.63	0.63	0.63	0.75
NN	2.20	2.75	3.50	4.00
PP	0.19	0.25	0.25	0.25
RR	0.88	1.06	1.50	1.88
SS	2.30	3.13	3.85	4.37
TT	0.75	1.00	1.00	1.00
UU	0.63	0.63	0.75	1.00
VV	#6-32	#8-32	1/4-20	5/16-18
ZZ	45°	45°	45°	63°

2 1/2" through 4" Bores

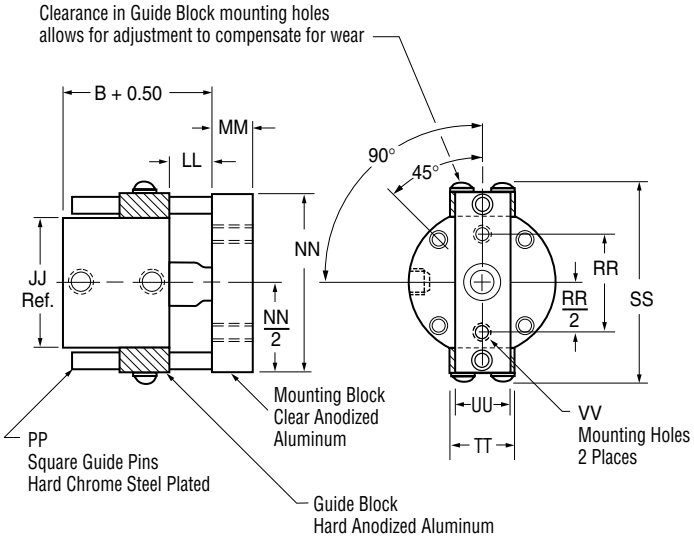

Model	521	721	1221
Bore	2 1/2"	3"	4"
JJ	3.74	4.24	5.50
LL	0.64	0.64	0.70
MM	0.75	1.00	1.25
NN	4.56	5.06	6.32
PP	0.31	0.31	0.31
RR	1.88	1.88	1.88
SS	4.88	5.38	7.09
TT	1.00	1.00	1.00
UU	1.00	1.00	1.25
VV	5/16-18	5/16-18	5/16-18